HURRICANE CITY
UTAH

Mayor
Nanette Billings

City Manager
Kaden DeMille

City Council

David Hirschi
Kevin Thomas
Clark Fawcett
Drew Ellerman
Joseph Prete

Hurricane City Council Meeting
Agenda

March 7, 2024
4:00 PM
City Council Chambers 147 N 870 W, Hurricane

Notice is hereby given that the City Council will hold a Regular Meeting in the City Council Chambers 147 N 870 W, Hurricane, UT. Meeting Link on Webex Meeting number: 2630 456 5376 Meeting password: HCcouncil Join from a video or application Dial 26304565376@cityofhurricane.webex.com. You can also dial 173.243.2.68 and enter your meeting number. Join by phone +1-415-655-0001 US Toll Access code:26304565376.
A silent roll call will be taken, followed by the Pledge of Allegiance and prayer by invitation.
THOSE WISHING TO SPEAK DURING PUBLIC FORUM MUST SIGN IN WITH THE RECORDER BY 6:00 P.M.

4:00 p.m. Work Meeting

1. Discussion on prioritizing roadways for the next five projects.
2. Agenda Summary

5:00 p.m. Pre-meeting

6:00 p.m. - Call to Order

Prayer

Thought

Pledge of Allegiance

Declaration of any conflicts of interest

Minutes of the Regular City Council Meeting for February 1, 2024

Introduction of 2024 Hurricane City Royalty and presentation of scholarships received

Public Forum – Comments from Public

Please Note: In order to be considerate of everyone attending the meeting and to more closely follow the published agenda, public comments will be limited to 3 minutes per person per item. A spokesperson representing a group to summarize their concerns will be allowed 5 minutes to speak. Repetitious commentary will not be allowed. If you need additional time, please request agenda time with Cindy Beteag in writing before 5:00 p.m. the Wednesday one week before the Council meeting.

NEW BUSINESS

1. Discussion and possible approval of a **City partnership with D1 Prospects Softball league**- Shawna Weaver

2. Consideration and possible approval of a new **Private Hangar Lease Agreement for hangar pad 12S 1E** for Brent Huddleston. -Dave Houston/Brent Huddleston.
3. Consideration and possible approval of a **new hangar pad located at 2N 2E at the City Airport together with a new Private Hangar Lease Agreement** for Sunnie, LLC. -Dave Houston/Scott Stratton
4. Consideration and possible approval of an **FAA grant application for AWOS** at the City Airport. -Mike Vercimak/Dave Houston
5. Consideration and possible approval of **adjusting the lot line along lot 28 and hole 18 at Sky Mountain Golf Course**-Jeff Beteag
6. Consideration and possible approval of **meeting times and the process of public engagement in planning the City Campus and Civic Center**
7. Consideration and possible approval of Ordinance 2024-04 **adopting Ash Creek Special Service District's monthly sewer service fee.** -Dayton Hall
8. Consideration and possible approval of Ordinance 2024-05 **approving and adopting Ash Creek Special Service District's Development Procedures Design Standards and Construction Specifications.** ---Dayton Hall
9. Discussion and possible approval of a **Boot Stompin Square Dance fundraiser for the Veterans Park**- Patti Nation
10. Consideration and possible approval of the **contract for the City Prosecutor.** -Kaden DeMille
11. Discussion about our City **Vision, Mission Statement, and Motto.**
12. Mayor, Council, and Staff reports
13. Closed Meeting held pursuant to Utah Code section 52-4-205, upon request

Adjournment

I hereby certify that the above notice was posted to the city website, (www.cityofhurricane.com) posted to the state public notice website, and at the following locations:
1. City office – 147 North 870 West, Hurricane, UT
2. The Post Office – 1075 West 100 North, Hurricane, UT
3. The library – 36 South 300 West, Hurricane, UT
_____ for the City Recorder

Agenda Summary for Hurricane City Council March 7, 2024

4:00 p.m. Discussion on prioritizing roadways for the next five projects.

5:00 p.m. Pre-Meeting

6:00 p.m. Call to Order

Approval of Minutes for February 1, 2024

Introduction of 2024 Hurricane City Royality and presentation of scholarships received.

New Business

1. D1 prospects is asking for us to waive or reduce our fee on our softball fields for them to hold 2 tournaments in the Spring (1 in April, 1 in May) as well as for an 8 week accelerated softball league held during June and July.
   We typically don't rent the fields during our baseball/softball season as it kicks our recreation teams off of the fields during the only time they are able to practice. But I told Matt Hirschi we could try 2 tournaments this Spring and see what kind of an impact we will have on our local participants. We did not talk about waiving the field fee for these 2 tournaments. I was under the impression that they were still paying a regular fee of $150 per day per field.
   I have asked for field rental fees from St. George, Washington and Santa Clara. Both St. George and Washington charge $500 per field per day. Santa Clara has a field rental fee of $350 for a full day and $250 for a half day.
   I feel our fee of $150 per day per field is very reasonable. Darren went back over his numbers and feels like our fee is barely covering the cost of employee time spent, materials, light use, and maintenance from the wear and tear on the field.
   I am very much for them coming and utilizing our fields. I am sure Shawna with D1 will do a great job and be great to work with but I don't think it should be at the city's expense that these tournaments and leagues come in and use the space. -Tiffani Wright

2. Background:
   Brent Huddleston is purchasing the hangar improvements at hangar pad 12S 1E from Jason Campbell. The existing lease is reaching the end of its term. Mr. Huddleston is requesting a new Private Hangar Lease Agreement for the hangar pad. The proposed agreement conforms to the template previously approved by the City Council.
   Applicable City Ordinances:
   The Airport Board "shall function in an advisory capacity to the City Council on all issues regarding the operation" of the airport. HCC 2-1-1(A). The Airport Board "shall operate solely as an advisory board to the City Council and shall have no power or authority to take any action or make any decision which would or which may have the effect of creating a liability for the City." HCC 2-1-1(B). "It shall be the duty of the Board to

review and recommend approval or disapproval of any agreement for the lease of property at the airport and the proposed use of each parcel of leased land." HCC 2-1-1. After a recommendation from the Airport Board, the proposal is forwarded to the Council for a final decision.

Recommendation:

The Airport Board discussed this item on February 20, 2024, and unanimously recommended approval. At the time the Board discussed the new lease, the proposal was in the name of Jason Campbell. The name on the lease has now been updated to Brent Huddleston at the request of the parties.

Attachments in the Packet:

- Proposed Private Hangar Lease Agreement.

Legal Review:

The City Attorney approves the form of the proposed lease.

-This summary was drafted by Dayton Hall, City Attorney.

3. Background:

Scott Stratton is requesting that a new hangar pad be created at the City Airport and that he be given a new Private Hangar Lease Agreement authorizing him to develop the pad and construct a hangar. The location of the proposed hangar pad is consistent with the Airport Layout Plan. Mr. Stratton's proposed lease agreement deviates from the lease template previously approved by the City Council in one way. The approved template requires that construction drawings for the hangar be submitted within eight months and that the hangar be completed within two years, but Mr. Stratton is requesting that the construction timeline in the lease be extended. Mr. Stratton is requesting that his deadline to submit construction plans be four years, with construction being completed within eight months of the building permit being issued.

Applicable City Ordinances:

The Airport Board "shall function in an advisory capacity to the City Council on all issues regarding the operation" of the airport. HCC 2-1-1(A). The Airport Board "shall operate solely as an advisory board to the City Council and shall have no power or authority to take any action or make any decision which would or which may have the effect of creating a liability for the City." HCC 2-1-1(B). "It shall be the duty of the Board to review and recommend approval or disapproval of any agreement for the lease of property at the airport and the proposed use of each parcel of leased land." HCC 2-1-1. After a recommendation from the Airport Board, the proposal is forwarded to the Council for a final decision.

Recommendation:

The Airport Board discussed this item on February 20, 2024, and unanimously recommended approval. The Airport Board specifically recommended that the construction timeline in the lease template be modified and extended as requested by Mr. Stratton.

Attachments in the Packet:

- Airport Layout Plan
- Proposed Private Hangar Lease Agreement

Legal Review:
The City Attorney approves the form of the proposed lease.
-This summary was drafted by Dayton Hall, City Attorney.

4. This agenda item is to consider authorizing the City to apply for federal assistance to fund the engineering and installation of an Automated Weather Observing System (AWOS) at the City Airport. The AWOS has been on the Airport's Capital Improvement Plan for some time. The facility would be installed between the existing runway and 1100 West, with the monitoring system installed in the City's hangar. It is estimated that federal funding would contribute $346,206, state funding would contribute $17,897, and City funding would contribute $17,897, for a total estimated cost of $382,000. The Airport Board has recommended that the City Council proceed with the AWOS funding and installation.
   The complete 68-page grant application is included in the packet.
   The grant application requires certain assurances from the City, including the following:
   The City has sufficient funds available for the portion of the project not paid by the United States.
   The City will operate the AWOS in a safe and serviceable condition.
   The City is capable of commencing work on the AWOS within six months after the grant is made.
   If the Council chooses to proceed, the application requires a motion by the Council authorizing the filing of the grant application, including all understandings and assurances contained in the application, and directing Mayor Billings and Mike Vercimak to proceed with the application, including providing such additional material as may be required by the FAA. -Dayton Hall

5. The property owner of lot 28 at Sky Mountain Golf Estates had their lot staked because they are getting ready to start a retaining wall and swimming pool. After the stakes were placed, they could see their lot encroached onto the golf course grass and there was a sprinkler head on their property that waters the golf course. They contacted me to walk the property and find a solution. After looking at the layout of the lot and the course, I thought the best remedy would be a boundary line (lot line) adjustment. Doing this would move the northwest pin five feet back towards the house but then move the northeast pin seven feet out further. This adjustment squares up the back of the lot and would help us avoid moving multiple sprinkler heads. It appears to be a pretty even trade of land, and it will make it better for both parties. The lot owner is willing to have

their surveyor create a boundary line agreement that can be recorded to adjust the line. - Jeff Beteag

6. FFKR + Desert Edge Architecture has collaborated with Hurricane City to provide a comprehensive study of existing conditions for select city buildings and departments for the city and plan for future use of land owned by the City. The design team has conducted an assessment of existing conditions of Hurricane City Administration, Public Services (Planning, Engineering, Public Works), Police, and Courts. They are working to organize the data and document information for current and future needs that respond to the growth of the population and the government resources needed to support the public.

   In addition, the team is studying existing cities within Utah, how they have expanded, and the actions and response to growth. Due to the large size of the land that is under City Ownership, there may be an opportunity to develop a stronger 'City Center' to celebrate the historic qualities of the town, the unique and beautiful landscape and provide an active zone for daily activities for city residents and local business. Research shows that strong city centers result in thriving communities.

   To realize this vision, it will be important to analyze public + private partnerships and other capital opportunities to minimize the tax burden to develop the property. The design team is working with Zions Securities and NAI real estate to help inform the City of the appropriate types of development that can be sustained on the site, and will help energize and activate this new City Center. - Jessica Hoffman

7. The three cities that make up the Ash Creek Special Service District (Hurricane, LaVerkin, Toquerville) have previously agreed to collect Ash Creek's monthly sewer fees. Hurricane City is currently collecting the fees as agreed. This ordinance formalizes the City's authority to collect the fee. Staff recommend approval. -Dayton Hall

8. Hurricane City, as a member of Ash Creek Special Service District, has previously adopted development standards for sewer installation within the City. Ash Creek has now adopted updated standards. The proposed ordinance adopts Ash Creek's updated standards. Ash Creek sits on the City's Joint Utility Committee and reviews development plans in conjunction with City staff. The City's adoption of Ash Creek's standards confirms that development in the City is required to comply with Ash Creek's standards. Ash Creek's standards, which are 172 pages long, are included in the packet. Staff recommend approval. -Dayton Hall

9. Fundraiser for the Veterans Park.

10. As directed by the Council in last year's budget meetings, Hurricane City posted a Request for Proposals for the City Prosecutor on January 5, 2024, with a submission deadline of January 22, 2024. Only one proposal was received, which was from Cowdell Law. With only one proposal, the submission deadline was extended to February 9, 2024. After the deadline extension, Cowdell Law remained the only applicant. Due to some personnel matters that required an interim prosecutor for the City Court to continue to function, Cowdell Law agreed to a 90-day temporary contract that started on February 1, 2024. Cowdell Law provides prosecuting services in several other Utah Justice Courts, and the references from those jurisdictions have been very positive. Having an interim/temporary prosecutor has been problematic because of the Bureau of Criminal Investigation compliance requirements that govern access to the protected records necessary for prosecution, so staff recommend that the Council appoint a permanent prosecutor. The proposal by Cowdell Law is to provide full-service prosecuting services, including all support staff, for a flat fee of $8,500 per month. The contract is for two years, but the City may terminate the contract at any time with proper notice. Staff recommend that the Council approve and accept the proposal by Cowdell Law. -Dayton Hall

11. VISION:
    Small town charm allowing families to thrive, with desirable open space we protect and cherish.

    MISSION:
    Hurricane City is committed to maintaining its unique small town charm, recognizing new growth and development will occur, and emphasizes the need to guide such development to help families thrive in business, recreation and the home.

    MOTO:

    Built by pioneers, who In God they Trusted.

    - Mayor Billings

Minutes of the Hurricane City Council meeting held on February 1, 2024, in the Council Chambers at 147 North 870 West, Hurricane, Utah, at 4:00 p.m.

Members Present: Mayor Nanette Billings and **Council Members**: David Hirschi, Clark Fawcett, Drew Ellerman, and Joseph Prete. Kevin Thomas (online)

Also Present: City Manager Kaden DeMille, City Attorney Dayton Hall, Police Chief Lynn Excell, Power Superintendent Scott Hughes, Public Works Director Mike Vercimack, City Planner Gary Cupp, Street Superintendent Weston Walker, Recreation Director Tiffani Wright, City Engineer Arthur LeBaron, Building Official Larry Palmer, Human Resource Director Sel Lovell, Water Superintendent Ken Richins, Finance Manager Paige Chapman, Planning Assistant Fred Resch III, Parks Superintendent Darren Barney, and City Recorder Cindy Beteag

AGENDA

4:00 p.m. Work Meeting

1. Discussion with Hurricane City Water Department

Ken Richins and Dayton Hall attended the water seminar in Cedar City, Utah. The seminar was hosted by the State of Utah and Washington County Water Conservancy District (WCWCD). Dayton Hall reviewed WCWCD's 20-year plan and a presentation comparing the expected growth and the necessary water supply to support that growth. Mayor Billings reported that the District used 1.2 billion gallons of water less in 2023 compared to 2022, despite a five percent increase in connections. Mr. Hall stated the District has started the process of developing a reuse water project. Councilman Hirschi asked if converting to a sprinkler system would save more water than flood irrigation. Mr. Richens confirmed that a sprinkling system uses less water than flood irrigation.

Mr. Richins explained that Hurricane City was awarded a zero percent loan from the Division of Water Rights to fund the irrigation expansion project, Gould's Wash Well, Sky Ranch Well, and the Sky Ranch Tank. He noted the location of the wells and water tanks within Hurricane City. Glen Carnahan with Alpha Engineering reviewed the progress of the current projects. He reported that the Sky Ranch tank is feeding into the high-pressure areas. The Sky Ranch Tank will go to bid in September of this year, and construction will take one year. He provided an exhibit of the secondary water expansion project and explained that the project would be executed in two phases to minimize roadway disruption. He anticipates a two-year construction period for each phase. The Sky Ranch tank is in the design process, and the project will go to bid in September 2024. The Dixie Springs well is anticipated to come online this year. The Gould's Wash Well project has been split into two projects with an anticipated completion date in June 2024. The Sky Ranch Well will be completed in two phases, with an anticipated completion date of November 2024. Kaden DeMille asked for an update on funding from the Natural Resources Conservation Service (NRCS). Mr. Carnahan reported that the NRCS is still reviewing the project. However, they have provided a commitment.

5:00 p.m. Pre-meeting - Discussion of Agenda Items, Department Reports

Kirra Dixon thanked Crystal Wright from the Power Department for her assistance in setting up the online timekeeping system. Mrs. Dixon reported that each department received training in the online timekeeping system, and nearly all employees are now submitting timecards online. Mayor Billings recognized Mrs. Dixon for completing this goal and putting it into place.

1. Presentation from the Drug and Gang Task Force Team

Chief Excell introduced Detective Leslie and Detective Erickson with the County Task Force Team and thanked them for their commitment to protecting the community.

Detective Leslie explained that the Washington County Drug Task Force was created in 1997. St. George, Washington County, Washington City, Hurricane City, and Adult Probation and Parole supply detectives to work with the Task Force. Detective Leslie reported that four hundred and twenty pounds of methamphetamine, fourteen pounds of heroin, eleven pounds of cocaine, 189,000 fentanyl pills, and thirty-nine firearms were seized in 2023. He noted that three ounces of methamphetamine and seven firearms were seized during the execution of search warrants in Hurricane City. Fentanyl powder, fentanyl pills, and one and a half pounds of methamphetamine were seized during a traffic stop in Hurricane City.

Detective Erickson reported that the Gang Division is now named the Focused Operations Group. They focus on gang crimes, gun crimes, human trafficking, prostitution, sex crimes, organized crime, street crimes, and terrorism. He reported that drive-by shootings and vehicle thefts dramatically increased in 2023. Detective Erickson is actively working on Brady denial cases. He explained that when a felon attempts to purchase a weapon, a Brady denial case is opened. He is actively working on solicitation of prostitution, solicitation of a child, juvenile criminal activity, and tracking criminal and gang activity.

Chief Excell mentioned the motorcycle gang location in the community is no longer a threat. He reported that there are several active phone frauds taking place. Many scams pertain to callers claiming that the individual has an arrest warrant and demanding payment to avoid arrest. The Citizens Academy is in its third week and going very well. There are two records clerk positions open in the Police Department.

Darren Barney stated with sadness that an employee of seventeen years passed away due to health complications. He was a supervisor, and the position has been opened in-house.

Scott Hughes reported that the department is focusing on the dirt work and sub-grading for the new substation. The pole that blew over on 3700 West did not hit the ground or cause any power outages.

Larry Palmer stated that six single-family homes, two condominium buildings with twenty-seven units, one townhome, and three industrial building permits were issued last week.

Tiffani Wright commented the Easter Car Show and Egg Hunt are coming up in March. The Farmer's Market will open soon and plans to run every Saturday until November. Joseph will be the Spring play. They are still working on the rights for the summer show. The basketball

DRAFT

program started this week. Many Community Center programs are already full, but they are still taking registrations for any program with an opening. The high school swim team is using the pool, and swim lessons start in April.

Mike Vercimack reported that seven plans have been approved in the past two weeks. The utility locator completes over one hundred locates weekly, and the Public Works inspector completes forty inspections weekly. The department is still in the process of implementing the new subdivision requirements.

Paige Chapman stated the December's financial statements are now complete. She will send budget spreadsheets to department heads to prepare for the upcoming budget year.

Arthur LeBaron reported that Hurricane City received a planning fund grant from the Dixie Metropolitan Planning Organization to evaluate the location of the Turf Sod Road between Washington Dam and the cattle guard. The bid opening for the Frog Hollow Rehabilitation will be on February 6th. Hurricane City will have a booth at the Dixie Transportation Expo on February 13th. The Statement of Qualifications for the Storm Drain Master Plan is due on the 20th. Mayor Billings requested a work meeting to discuss roadway improvements and landscape strips.

Gary Cupp is planning to hold General Plan trainings during the staff meeting portion of the City Council meetings. The Planning Department is updating the water elements of the General Plan. Moving forward, the staff report will include details on how the water fits into the District's requirements. He attended the Zion Corridor meeting today. The meeting focused heavily on the Regional Trail System and proposed bus stops.

6:00 p.m. - **Call to Order** –

Mayor Nanette Billings welcomed everyone and called the meeting to order.

Prayer, Thought, and Pledge led by Mayor Billings

Declaration of any conflicts of interest

None declared.

Minutes of the Regular City Council Meeting for December 7, 2023, January 4, 2024, and January 18, 2024.

David Hirschi motioned to approve all minutes. Seconded by Joseph Prete. Motion carried unanimously.

Discussion with the Youth City Council on the beautification of commercial properties was moved to the next meeting agenda.

Presentation by the Rotary Club regarding the Easter Car Show

DRAFT

Clint Lawton, the President of the Rotary Club, thanked the City Council for their support. He reported that the funds raised from the Easter Car Show support projects throughout the City. They are raising money this year for the Veteran's Memorial Park.

Presentation on the subdivision ordinance

Fred Resch III reported that Senate Bill 174 was enacted on February 1, 2024. Hurricane City Council passed an ordinance to address the new requirements. He reviewed the updated subdivision, preliminary plat process, and final plat review timeline. One of the main changes is that preliminary plats must include full construction drawings. He stated pre-application meetings are generally held on Thursday mornings; they are not mandatory but are highly recommended. Per State Law, the Planning Commission is now the approval board, and subdivisions must be approved if they meet the ordinance.

Public Forum – Comments From Public

Chris Wyler with Pecan Valley Resort explained that the resort could not obtain a Certificate of Occupancy (CO) before completing the clubhouse. He feels it will be beneficial for the City Council to tour the project to determine if the clubhouse should hold back the Certificate of Occupancies. Mr. Wyler reported that homeowners are seeking permission to utilize their homes personally. He explained that the homes would only be used as nightly rentals once the clubhouse was complete. Councilman Ellerman explained that per building code, buildings can only be used once a CO is issued. Dayton Hall clarified that Mr. Wyler is asking the City Council to reconsider their previous ruling to not allow COs on the resort's second phase before the completion of the clubhouse. Megan Walker reported that each home has a private pool, pickleball courts, and home theaters. She asked if this could be considered as alternative compliance.

OLD BUSINESS

1. Consideration and possible approval of an **assignment of the Hurricane Airport Land Lease** for hangar pad 7S 3W. Dave Houston/William Johnston

Dayton Hall reported that during the previous City Council meeting, questions were brought up regarding the ownership of the hangar. After researching the hangar pad information, it has been determined that the ownership is not in question.

Clark Fawcett motioned to approve the assignment of the Hurricane Airport Land Lease for hangar pad 7S 3W. Seconded by David Hirschi. Joseph Prete, Drew Ellerman, Kevin Thomas, Clark Fawcett, and David Hirschi – aye. Motion carried unanimously.

2. Consideration and possible approval of Resolution 2024-11 to **request the Washington County Water Conservancy District and State Trust Lands Administration to dedicate property** for the widening of Sand Hollow Road to its master-planned width.

David Hirschi motioned to approve Resolution 2024-11. Seconded by Joseph Prete. Kevin Thomas, Drew Ellerman, Clark Fawcett, David Hirschi, and Joseph Prete – aye. Motion carried unanimously.

3. Consideration and possible approval on a **preliminary plat for Sandwater Estates, a 153 lot single family subdivision** located at 4200 W 2300 S. Richardson Brothers Custom Homes, Applicant. Karl Rasmussen, Agent.

Mayor Billings reviewed the summary provided in the packet. Karl Rasmussen provided maps detailing the proposed access trail between lots 135 & 134, noting the location of the future detention basin. He reported that this item was previously continued pending a contractual agreement. The applicant requests to table the item to allow them to bring the plat forward when they are prepared to proceed with the project. Dayton Hall stated the contractual obligation proposed by the applicant does not correctly guarantee that the roadway will be built to service the subdivision. Councilman Ellerman asked if it is best to deny the item, requiring the applicant to go through the updated process when they are ready to proceed and waiving the applicant fee. Rick Richardson asked what the parameters would dictate them moving forward. Dayton Hall explained the applicant must provide approved construction drawings showing adequate public facilities for the development and proper bonding.

Drew Ellerman motioned to deny the preliminary plat for Sandwater Estates, a 153-lot single-family subdivision located at 4200 W 2300 S because infrastructure is not in place. The fee will be waived if the same project is brought forth within eighteen months. Motion died for lack of a second.

Clark Fawcett motioned to table the preliminary plat for Sandwater Estates, a 153 lot single family subdivision located at 4200 W 2300 S, for up to six months. Seconded by Joseph Prete. David Hirschi, Clark Fawcett, and Joseph Prete – aye. Kevin Thomas and Drew Ellerman – nay. Motion carried.

NEW BUSINESS

1. Consideration and possible approval of the **local consent for a beer garden** at the Washington County Fair

Joseph Prete motioned to approve local consent for a beer garden at the Washington County Fair. Seconded by Drew Ellerman. Clark Fawcett, David Hirschi, Kevin Thomas, Joseph Prete, and Drew Ellerman – aye. Motion carried unanimously.

2. Consideration and possible approval of **supporting the Hurricane Valley Symphony**

Debbie Thorton, Julie Curtis, and William Wixom-Burdick, with Hurricane Valley Symphony, were in attendance. Debbie Thorton read the symphony's mission statement. She reported that the symphony is now a 501C3. However, they are asking the City Council to allow them to use the City logo, City newsletter, and social media to advertise their programs. Kaden DeMille mentioned several entities are requesting to use the City's logo and platforms as an advertising

outlet. He is not opposed to supporting the symphony or other nonprofit organizations. However, he feels there needs to be a policy in place to govern that use.

Clark Fawcett motioned approval of supporting the Hurricane Valley Symphony, recognizing that Hurricane Valley Symphony is an essential asset to the community, allowing logo use as a sponsor, and staff approval of advertisement. Seconded by David Hirschi. Drew Ellerman, Clark Fawcett, and David Hirschi – aye. Kevin Thomas and Joseph Prete – nay. Motion carried.

3. Consideration and possible approval of a preliminary plat for **Trails at Sand Hollow, a 673-unit multifamily development located at 4000 W Sand Hollow Road.** Brad Mabey, Applicant. Karl Rasmussen, Agent.

Mayor Billings reviewed the summary provided in the packet. Karl Rasmussen anticipates that the roadway will be completed in June. The bond is in place, and the water, sewer, and power are stubbed to the property.

Joseph Prete motioned to approve preliminary plat for Trails at Sand Hollow, a 673 unit multifamily development located at 4000 W Sand Hollow Road. Seconded by Drew Ellerman. Clark Fawcett, David Hirschi, Kevin Thomas, Joseph Prete, and Drew Ellerman – aye. Motion carried unanimously.

4. Presentation and discussion of **parks and trails master plan**

Gary Cupp reported that the second Public Input Workshop was held last week. Two hundred twenty-eight surveys were completed. Fifty-five percent of survey respondents feel the City meets the demands for programming and facilities. Mr. Cupp reviewed the presentation prepared by the consultants. The most used parks per the survey are Grandpa's Park, Community Center, Pioneer Park, and Dixie Springs. Survey respondents would like to have a variety of parks with an emphasis on parks along the river and connecting the gaps in the existing trail system. Mr. Cupp reviewed the results for the top ten recreation programs and discussed the safety concerns indicated in the survey responses. The drafted plan will be available for the public in March, and the finalized draft will be available in June.

Kevin Thomas was excused at 8:00 p.m.

5. Discussion and possible approval of **putting the pump track back up somewhere in the City.**

Tiffani Wright stated the pump track was originally located north of the Fine Arts building. It was removed due to continuous vandalism. The skating community adamantly wants an adequate pump track in the community. Councilman Fawcett feels the vandalism will continue regardless of the location. Mayor Billings asked if placing the pump track in its original location, with strict safety rules and a perimeter fence, was feasible. Darren Barney stated other communities fence and lock their track; he noted that it is crucial to have a camera system to discourage vandalism. Tiffani Wright will research more appropriate locations and report back to the City Council.

DRAFT

David Hirschi motioned to continue the discussion and possible approval of putting the pump track back up somewhere in the City. Seconded by Joseph Prete. Clark Fawcett, Drew Ellerman, Kevin Thomas, David Hirschi, and Joseph Prete – aye. Motion carried unanimously.

6. Consideration and possible approval of **Resolution 2024-12 appointing Kerry Prince to the Power Board**

David Hirschi motioned to approve Resolution 2024-12. Seconded by Joseph Prete. Clark Fawcett, Kevin Thomas, Drew Ellerman, David Hirschi, and Joseph Prete – aye. Motion carried unanimously.

7. Closed Meeting held pursuant to Utah Code section 52-4-205, upon request.

No closed meeting was held.

Mayor, Council, and Staff Reports

Mayor Billings reviewed and provided her notes on the Mill-Creek Commons Tour.

Councilman Prete thanked the power and water department for hosting the Youth City Council meeting. He expressed his gratitude for the Council Retreat. He feels it was an excellent opportunity to discuss concerns and issues.

Adjournment: 8:56 p.m.

DRAFT

HURRICANE CITY
UTAH

STAFF COMMENTS

Discussion and possible approval of a **City partnership with D1 Prospects Softball league**- Shawna Weaver

Discussion:

D1 prospects is asking for us to waive or reduce our fee on our softball fields for them to hold 2 tournaments in the Spring (1 in April, 1 in May) as well as for an 8 week accelerated softball league held during June and July.

We typically don't rent the fields during our baseball/softball season as it kicks our recreation teams off of the fields during the only time they are able to practice. But I told Matt Hirschi we could try 2 tournaments this Spring and see what kind of an impact we will have on our local participants. We did not talk about waiving the field fee for these 2 tournaments. I was under the impression that they were still paying a regular fee of $150 per day per field.

I have asked for field rental fees from St. George, Washington and Santa Clara. Both St. George and Washington charge $500 per field per day. Santa Clara has a field rental fee of $350 for a full day and $250 for a half day.

I feel our fee of $150 per day per field is very reasonable. Darren went back over his numbers and feels like our fee is barely covering the cost of employee time spent, materials, light use, and maintenance from the wear and tear on the field.

I am very much for them coming and utilizing our fields. I am sure Shawna with D1 will do a great job and be great to work with but I don't think it should be at the city's expense that these tournaments and leagues come in and use the space. -Tiffani Wright

Findings:

Recommendation:

Attachments:

1. Hurricane city brief
2. LOR SUU USG
3. certificate of insurance

PROSPECTS

www.D1-PROSPECTS.ORG

League & Tournament D1 Prospects Sanction Agreement

Feb 24, 2024

To: Hurricane City Council and Hurricane Recreation Programs Director
Attn: Mayor Nannette Billings and Recreation Director Tiffani Wright
From: D1 Prospects, D1 Prospects Org., LLC (D1)
Re: 2024 request for Tournaments and Leagues

Thank you for considering a partnership with D1 Prospects. We look forward to partnering with Programs, Cities, and Communities that believe in fostering Youth Programs. These programs are where our youth learn to fall in love with sports and gain knowledge of healthy habits and activities.

We at D1 Prospects are passionate about using sports to empower youth and cultivate future community leaders. We take great pride in our programs and services. D1 Prospects leads the state in Fastpitch Softball Programs because we remain committed to our Mission of providing and supporting youth programs that EMPOWER - by

- Leading through a relentless pursuit of the highest level of quality both individually and as a whole team: intellectually, personally, and professionally
- Inspiring healthy lifestyle choices through participation in sports
- Creating a strong sense of community among players, coaches, volunteers, supporters, and community members. As we continue to focus on our youth participants, we will always provide a quality service through positive change and professional connections.

Our Mission:

Empower youth to become leaders in life through active participation in sports. Incorporating championship life skills such as building confidence and self-esteem, teamwork, goal setting, and resiliency.

Our goal is to host 2 fastpitch tournaments and 1 fastpitch league in the city of Hurricane. Most Fastpitch events in Washington County are held in the city of St. George. **These** events will allow Hurricane City to tap into the sport by hosting in their community.

Challenges:

1. Fees for the Parks for the League
    a. $150 per field per day - based on a 15-hour day
    b. Includes 1 field preparation
    c. The league will only run 5 hours vs the 15 hours for a tournament

We are asking that the council consider the overall positive impact that these events are having on the local economy, the local community as well as local HS programs.
To run the league we will need the Council to consider waiving or drastically reducing the per-field Rental Fee.

PROSPECTS

www.D1-PROSPECTS.ORG

2024 Fastpitch Softball Events:

1. Tournaments
    a. **Hurricane Heat** - April 19-20, 2024. Age Division 10u & 12u $550 per team fee
        i. Estimated # of teams is 30
        ii. Estimated # of Participants is 480
        iii. Estimated # of spectators is 1,920
        iv. Registered teams from outside Washington County Area
        v. Teams from Utah, Colorado, Nevada, and New Mexico
    b. **Hurricane Heat** May 10-11 2024. Age Division 14/15u $550 per team fee
        i. Estimated # of teams 30
        ii. Estimated # Participants 480
        iii. Estimated # of spectators 1,920
        iv. Registered teams are from outside the Washington County Area
        v. Teams are from Utah, Colorado, Nevada, and New Mexico
2. Economic Impact for Tournaments
    a. Estimated # of Teams: #60
    b. Estimated # participants #960-1,000
    c. Estimated # of Spectators #3,840 - 4,000
    d. Registered teams from Utah, Colorado, Nevada, and New Mexico
    e. The average length of stay is 2 nights
    f. Participants 960 x 2 x $225= $432,000
    g. Spectators 3,840 x 2 x $225*2=$1,728,000
    h. Total Direct impact $2,160,000
3. League
    a. **Hurricane Accelerated League** June 3- August 7th, 2024
        i. Games will be played 2 days a week: Monday & Wednesday (5hrs)
        ii. 3 games per night per field (4 fields) 5:30 pm, 7:00 pm, 8:30 pm
        iii. Estimated # of teams 24 (12 per night)
        iv. Estimated # of participants 384 (192 per night)
        v. Estimated # of Spectators 768 per night
        vi. Estimated Economic Impact per night $15,360
        vii. Total Estimated Economic Impact -19 days $291,840
4. Return on Investment (ROI)
    a. Total Cost of the fields for the league is estimated at $11,400
    b. Total Estimated Economic Impact for Tournaments and League $2,451,840
    c. Total Return on Investment is 21,407.37 %%%%%%
    d. All Partners are acknowledged on our Social Media and websites
    e. All Partners receive a logo placement with a direct link

SUU SOUTHERN UTAH UNIVERSITY

February 26, 2024

RE: Shawna Weaver/D1 Prospects

To Whom It May Concern:

It is with sincerity that I write on behalf of Shawna Weaver and D1 Prospects. I have worked with Shawna for almost a year, with her company serving as the sport coordinator for softball for the Larry H. Miller Utah Summer Games. In my time working with Shawna, I have found her to be an extremely adept tournament organizer and manager, utilizing her relationships to build and manage high-quality events.

Prior to Shawna and D1 Prospects being involved with the Larry H. Miller Utah Summer Games, softball was virtually non-existent for our department. We struggled to continuity, and we also had issues competing with established summer club tournaments. The hire of D1 Prospects and Shawna Weaver changed that narrative for the Larry H. Miller Utah Summer Games. In three years of working together, Shawna has taken our tournament to a high of 87 teams, recruiting teams from all over the state in a variety of age brackets to experience Cedar City and the Summer Games.

In my work with Shawna, I have found her to be networked in the softball world, working consistently with established club programs and venues throughout the state. Additionally, I have seen her business acumen on display as she negotiates contracts that clearly define expectations for all parties. Shawna very clearly communicates her expectations with partners, allowing for there to be little to no misunderstanding in standards she has in managing events. Additionally, she works to have active discourse with partners on ideas and methods to improve the tournament, whether they be in the recruitment of teams, bracketing, or other notions that create a first-of-class event.

I have little issue in recommending Shawna as a considerable presence in the world of Utah club softball. Her connections in the sport, mixed with her abilities, make her one of the leaders in tournament competition in the state. We are excited to continue working with Shawna for many years to come.

If you have questions about Shawna, or require more information, please don't hesitate to email me at jonoglesby@suu.edu. Thank you.

With gratitude,

Jon Oglesby
Executive Director, Larry H. Miller Utah Summer Games
Southern Utah University

Larry H. Miller USG

CERTIFICATE OF LIABILITY INSURANCE

DATE (MM/DD/YYYY) 02/23/2024

THIS CERTIFICATE IS ISSUED AS A MATTER OF INFORMATION ONLY AND CONFERS NO RIGHTS UPON THE CERTIFICATE HOLDER. THIS CERTIFICATE DOES NOT AFFIRMATIVELY OR NEGATIVELY AMEND, EXTEND OR ALTER THE COVERAGE AFFORDED BY THE POLICIES BELOW. THIS CERTIFICATE OF INSURANCE DOES NOT CONSTITUTE A CONTRACT BETWEEN THE ISSUING INSURER(S), AUTHORIZED REPRESENTATIVE OR PRODUCER, AND THE CERTIFICATE HOLDER.

IMPORTANT: If the certificate holder is an ADDITIONAL INSURED, the policy(ies) must have ADDITIONAL INSURED provisions or be endorsed. If SUBROGATION IS WAIVED, subject to the terms and conditions of the policy, certain policies may require an endorsement. A statement on this certificate does not confer rights to the certificate holder in lieu of such endorsement(s).

PRODUCER

Chappell Insurance
4335 Cox Rd Ste 4335
Glen Allen, VA, 23060

CONTACT NAME: **Daryl Chappell**
PHONE (A/C, No. Ext): **804-733-2020** FAX (A/C, No): **804-591-1603**
E-MAIL ADDRESS: **support@chappellinsurance.com**

INSURED

D1 Prospects, Inc.
PO Box 546
Mona, UT 84645

INSURER(S) AFFORDING COVERAGE		NAIC #
INSURER A:	SiriusPoint America Insurance Company	**38776**
INSURER B:	Axis Insurance Company	**37273**
INSURER C:		
INSURER D:		
INSURER E:		
INSURER F:		

COVERAGES CERTIFICATE NUMBER: **NS-AI-323** REVISION NUMBER:

THIS IS TO CERTIFY THAT THE POLICIES OF INSURANCE LISTED BELOW HAVE BEEN ISSUED TO THE INSURED NAMED ABOVE FOR THE POLICY PERIOD INDICATED. NOTWITHSTANDING ANY REQUIREMENT, TERM OR CONDITION OF ANY CONTRACT OR OTHER DOCUMENT WITH RESPECT TO WHICH THIS CERTIFICATE MAY BE ISSUED OR MAY PERTAIN, THE INSURANCE AFFORDED BY THE POLICIES DESCRIBED HEREIN IS SUBJECT TO ALL THE TERMS, EXCLUSIONS AND CONDITIONS OF SUCH POLICIES. LIMITS SHOWN MAY HAVE BEEN REDUCED BY PAID CLAIMS.

INSR LTR	TYPE OF INSURANCE	ADDL INSD	SUBR WVD	POLICY NUMBER	POLICY EFF (MM/DD/YYYY)	POLICY EXP (MM/DD/YYYY)	LIMITS	
A	X COMMERCIAL GENERAL LIABILITY CLAIMS-MADE X OCCUR GEN'L AGGREGATE LIMIT APPLIES PER: X POLICY PROJECT LOC OTHER:	X		**PLH01GL00000691**	01/01/2024 12:01 AM	01/01/2025 12:01 AM	EACH OCCURRENCE	$ **2,000,000**
							DAMAGE TO RENTED PREMISES (Ea occurrence)	$ **1,000,000**
							MED EXP (Any one person)	$
							PERSONAL & ADV INJURY	$ **1,000,000**
							GENERAL AGGREGATE	$ **5,000,000**
							PRODUCTS-COMP/OP AGG	$ **2,000,000**
							Participant Legal Liability	$ **1,000,000**
	UMBRELLA LIAB OCCUR						EACH OCCURRENCE	$
	EXCESS LIAB CLAIMS-MADE						AGGREGATE	$
	DED RETENTION							$
	PARTICIPANT ACCIDENT						EXCESS MEDICAL	$
							DEDUCTIBLE	$

DESCRIPTION OF OPERATIONS / LOCATIONS / VEHICLES (ACORD 101, Additional Remarks Schedule, may be attached if more space is required)

The certificate holder is an additional insured but only with respect to the operations of the named insured. D1 Prospects, Inc. and its director(s) is a named insured on this policy.This policy covers D1 Prospects, Inc. activities only.

Coverage Effective From 12:38 PM on 02/23/2024 TO 01/01/2025

CERTIFICATE HOLDER

Hurricane City
147 N 870 W
Hurricane, UT 84737

Certificate Number: NS-AI-323

CANCELLATION

SHOULD ANY OF THE ABOVE DESCRIBED POLICIES BE CANCELLED BEFORE THE EXPIRATION DATE THEREOF, NOTICE WILL BE DELIVERED IN ACCORDANCE WITH THE POLICY PROVISIONS.

AUTHORIZED REPRESENTATIVE

© 1988-2015 ACORD CORPORATION. All rights reserved.

Notice to Texas Insureds: The insurer for the purchasing group may not be covered by an insurance insolvency guarantee fund or similar mechanism and the insurer of the group is not subject to all the insurance laws and regulations of this state.

HURRICANE CITY
UTAH

STAFF COMMENTS

Consideration and possible approval of a new **Private Hangar Lease Agreement for hangar pad 12S 1E** for Brent Huddleston. -Dave Houston/Brent Huddleston.

Discussion:

Background:
Brent Huddleston is purchasing the hangar improvements at hangar pad 12S 1E from Jason Campbell. The existing lease is reaching the end of its term. Mr. Huddleston is requesting a new Private Hangar Lease Agreement for the hangar pad. The proposed agreement conforms to the template previously approved by the City Council.

Applicable City Ordinances:
The Airport Board "shall function in an advisory capacity to the City Council on all issues regarding the operation" of the airport. HCC 2-1-1(A). The Airport Board "shall operate solely as an advisory board to the City Council and shall have no power or authority to take any action or make any decision which would or which may have the effect of creating a liability for the City." HCC 2-1-1(B). "It shall be the duty of the Board to review and recommend approval or disapproval of any agreement for the lease of property at the airport and the proposed use of each parcel of leased land." HCC 2-1-1. After a recommendation from the Airport Board, the proposal is forwarded to the Council for a final decision.

Recommendation:
The Airport Board discussed this item on February 20, 2024, and unanimously recommended approval. At the time the Board discussed the new lease, the proposal was in the name of Jason Campbell. The name on the lease has now been updated to Brent Huddleston at the request of the parties.

Attachments in the Packet:

1. Proposed Private Hangar Lease Agreement.

Legal Review:
The City Attorney approves the form of the proposed lease.
-This summary was drafted by Dayton Hall, City Attorney.

Findings:

Recommendation:

Attachments:

1. 240228 HURRICANE AIRPORT - PRIVATE HANGAR LEASE AGREEMENT (Brent Huddleston)

PRIVATE HANGAR LEASE AGREEMENT

BETWEEN

HURRICANE CITY, UTAH

AND

BRENT HUDDLESTON

Effective Date: March 7, 2024

PRIVATE HANGAR LEASE AGREEMENT

THIS PRIVATE HANGAR LEASE AGREEMENT (which, as amended from time to time, is defined herein as the ("Agreement") is entered into as of the 7th day of March, 2024, by and between Hurricane City, Utah, a Utah municipal corporation, (the "City") and Brent Huddleston (the "Tenant").

RECITALS

WHEREAS, City owns and operates an airport located at 800 W. 2300 S., Hurricane, Utah 84737 (the "Airport"); and

WHEREAS, City and Tenant desire to accommodate, promote, and enhance general aviation at the Airport; and

WHEREAS, Tenant desires to lease certain real property at the Airport for the purpose of constructing or purchasing a private hangar for aircraft as provided in this Agreement;

NOW, THEREFORE, in consideration of the covenants and conditions stated herein, the sufficiency of which is hereby acknowledged, the parties agree as follows:

1. Agreement to Lease and Operate Concession

A. Agreement to Lease Premises. City hereby leases to Tenant and Tenant hereby leases from City that certain real property 3,850 square feet in size (excluding the front and including twelve feet on the west side of the hangar for parking and including five feet beyond the hangar pad on the two remaining sides) and located at the property identified as 12S 1E on the Airport property (the "Premises"). The size of the leased property is to accommodate a 60'x45' hangar. Tenant agrees to accept the Premises "as is" and City makes no warranty as to the condition of the Premises or its suitability for any particular purpose.

B. Disclosure of Soil Condition. City discloses to Tenant that the soil at the Airport is collapsible and otherwise unstable. Tenant is responsible to obtain appropriate soil evaluation reports, to adhere to the recommendations in the reports, and take whatever action is necessary to mitigate the soil condition on the Premises. Tenant is responsible to construct the hangar at the engineered drainage elevations so the drainage will flow properly. Tenant will maintain and keep the area around the premises clear of debris and obstructions so as not to cause disruption in the expected normal drainage flow.

C. Construction of Tenant Improvements. Tenant shall construct or purchase and maintain continuous improvements on the leased Premises, which shall include a concrete pad, an aircraft hangar, fixtures, and any utilities as may be necessary for the Tenant's aviation related activities (referred to herein as the "Tenant Improvements"). Such Tenant Improvements must meet the Airport's Building Development Standards and any applicable Federal Aviation Administration requirements in effect as of the date of this Agreement.

D. Grant of Concession and Purpose of Agreement. Tenant agrees that it shall have the right, privilege, and obligation to use the Premises for the following purposes: The parking, storage, service, repair, light maintenance, operation, and modification or construction (on a noncommercial basis only) of Aircraft, plus incidental activities related to such purposes. An

("Aircraft") shall be any aircraft that Tenant owns or controls, or that is subject to an authorized sublease, when approved in writing in advance by City. Tenant shall provide to City the make, model, and registration number of any Aircraft owned or controlled by Tenant, or that are subject to an authorized sublease, that are based at the Premises.

E. Access. City agrees that if Tenant is not in breach of this Agreement, Tenant and Tenant's employees, officers, directors, subtenants that are approved by City pursuant to this Agreement, contractors, subcontractors, suppliers, agents, invitees, and other representatives ("Tenant's Associates") may ingress and egress across the Airport in the areas designated by City and as permitted by applicable Laws and Regulations, on a non-exclusive basis and to the extent reasonably necessary for Tenant's use, occupancy, and operations at the Premises.

F. Right of Flight and Other Reserved Rights. This Agreement conveys only a leasehold interest in the Premises on the terms and for the purposes provided herein, and it conveys no other rights, titles, or interest of any kind. City reserves rights in the Premises including but not limited to, a right of aircraft movement on Airport property, a right of flight for the passage of aircraft in the air, a right to cause such noise as may at any time be inherent in the operation of aircraft, subject to the rules, regulations, and policies as may be adopted from time to time by the City, and rights in water, minerals, oil, and gas.

G. Enjoyments of Rights. Subject to Tenant's complete performance of the payment and other obligations contained in this Agreement, Tenant shall enjoy the rights, uses, and privileges stated in this Agreement.

2. Term. The term of this Agreement shall commence on the date of execution of this Agreement and shall continue thereafter for a term of twenty (20) years until March 7, 2044, (the "Initial Term"). If the tenant desires to renew this Agreement, the tenant must notify the City in writing at least 60 days prior to the expiration of the initial term. Upon such notification, this lease shall renew for an additional five (5) year period at the lease rates stated in Section 3 of this Agreement.

3. Rent

A. Rent. For Tenant's lease of the Premises, Tenant covenants to pay to City without off-set or deduction the annual ground rent as shown in the table below and commencing on the date of execution of this Agreement. All rent shall be due and payable to the City of Hurricane annually in advance, without notice or demand from City, on the 1st day of August. The first year's rent payment will be prorated to the next August 1st payment date.

Years	Rent amount per square foot
2022 – 2027	.15
2028 – 2033	.18
2034 – 2039	.21
2040 – 2045	.24
2046 – 2051	.27
2052 – 2057	.30
2058 – 2063	.33

C. Dishonored Checks. If any check paid on behalf of Tenant is dishonored or returned by a bank for any reason, Tenant shall pay all charges assessed to City by the bank plus a

service charge of fifty dollars ($50.00) per occurrence (or such other amount as City shall implement from time to time) in addition to other sums due under this Agreement.

D. Past Due Amounts. If tenant fails to pay when due any amount required to be paid by Tenant under this Agreement, such unpaid amount shall bear interest at the rate of eighteen percent (18%) from the due date of such amount to the date of payment in full, with interest. In addition, City may charge a sum of five percent (5%) of such unpaid amount as a service fee, which the parties agree is a reasonable amount to cover the additional costs for billing and collecting arising from Tenants failure to make payment in a timely manner. All amounts due under this Agreement are and shall be deemed to be rent, and shall be paid without abatement, deduction, off-set, prior notice, or demand (unless expressly provided by the terms of this Agreement). City's acceptance of any past due amount either full or partial (or its associated interest or service fee) shall not constitute a waiver of any default under this Agreement.

4. Tenant's Use of Premises and Airport

A. No Interference. Tenant and Tenant's Associates shall not use the Premises or the Airport in any manner that interferes with any operation at the Airport or decreases the Airport's effectiveness, as reasonably determined by the City at its sole discretion. Tenant shall promptly notify City of any use that creates such interference or decrease of effectiveness and remedy the same to City's satisfaction.

B. Comply with all Laws and Regulations. Tenant and Tenant's Associates shall comply at all times, at Tenant's sole cost, with any and all laws and regulations (as amended or otherwise modified from time to time) that are applicable to Tenant's use, occupancy, or operations at the Premises or the Airport (the "Laws and Regulations"), which include but are not limited to, the Airport Rules and Regulations, Policies and Procedures, Minimum Standards for Commercial Aeronautical Activities, Utah Code Annotated, the Code of Revised Ordinances of Hurricane City, the Protective Covenants of the Hurricane City Airport, applicable Federal Aviation Regulations, and all lawful, reasonable, and nondiscriminatory Airport policies and other requirements.

C. No Unauthorized Use. Tenant and Tenant's Associates shall use the Premises and the Airport only for purposes that are expressly authorized by this Agreement and shall not engage in any unauthorized use of the same. Unauthorized uses include, but are not limited to, any use that would damage, interfere with, or alter any improvement; restricting access on any road or other area that Tenant does not lease; placing waste materials on the Airport or disposing of such materials in violation of any Laws and Regulations; any use that would constitute a public or private nuisance or a disturbance or annoyance to other Airport users; the use of automobile parking areas in a manner not authorized by City; fueling activities on the Premises or any other area that City has not authorized; commercial activities, aircraft parking, or storage in areas not leased by Tenant, any use unrelated to the purposes of this Agreement; and any use that would be prohibited by or would impair coverage under either party's insurance policies.

D. Permits and Licenses. Tenant shall obtain and maintain in current status all permits and licenses that are required under any Laws and Regulations in connection with Tenant's use, occupancy, or operations at the Premises or the Airport. In the event that Tenant receives notice from any governmental authority that Tenant lacks, or is in violation of, any such permit or license, Tenant shall provide City with timely written notice of the same.

E. Taxes and Liens. Tenant shall pay (before their respective due dates) all taxes, fees, assessments, and levies that relate to Tenant's use, occupancy, or operations at the Premises or the Airport and all other obligations for which a lien may be created relating thereto (including, but not limited to, utility charges and work for the Tenant Improvements). Within ten (10) days of notice of such lien, Tenant shall have the lien removed or deposit with the City cash or other security acceptable to City in an amount sufficient to cover the cost of removing such lien. When contracting for any work in connection with the Premises, Tenant shall include in such contract a provision prohibiting the contractor or any subcontractor or supplier from filing a lien or asserting a claim against City's real property or any interest therein.

F. Damage to Property and Notice of Harm. Tenant, at Tenant's sole cost, shall repair or replace to City's satisfaction any damaged property that belongs to City or City's other Tenants to the extent that such damage arises from or relates to an act or omission of Tenant or Tenant's Associates. Tenant shall promptly notify City of any such property damage. If Tenant discovers any other potential claims or losses that may affect City, Tenant shall promptly notify City of the same.

G. No Alterations or Improvements. Tenant shall not make or cause to be made any alterations or improvements to the Premises or to other areas of the Airport without City's prior written consent.

H. Security. Tenant is responsible to comply, at Tenants sole cost, with all security measures that City, Federal Aviation Administration, the United States Transportation Security Administration or any other governmental authority having jurisdiction may require in connection with the Airport. Tenant shall protect and preserve security at the Airport, including, but not limited to, protecting security information and protecting any access points to the Airport that are maintained by Tenant. Tenant will be vigilant in watching for unusual activity or persons that do not belong at the Airport, and will report such to the Airport Manager or by calling 1-866-GA-SECURE.

I. Removal of Disabled or Derelict Aircraft. Tenant shall promptly remove or cause to be removed from any portion of the Airport not leased by Tenant the Aircraft (or any other aircraft that Tenant owns or controls) if it becomes disabled or derelict. Tenant may store such aircraft within the Tenant Improvements or, with the City's prior written consent, elsewhere at the Airport on terms and conditions established by City. If Tenant fails to comply with this requirement after a written request by City to comply, City may (but is not required to) cause the removal of any such aircraft at Tenant's expense by any means that City determines to be in City's best interests.

J. Maintenance, Repair, Utilities, and Storage. Tenant's use, occupancy, and operations at the Premises shall be without cost or expense to the City. Tenant shall be solely responsible to design and construct the Tenant Improvements and to maintain, repair, reconstruct, and operate the Premises and the Tenant Improvements at Tenant's sole cost and expense, including, but not limited to, all utility services, janitorial services, waste disposal, and ramp repair. Tenant shall at all times maintain the Premises and the Tenant Improvements in a condition that is clean, safe, sanitary, and in good repair. Tenant shall perform all work in accordance with Laws and Regulations and in a good and workmanlike manner. City has sole discretion to determine the quality of the work. Tenant shall promptly remedy any condition that fails to meet this standard. In addition to other restrictions and requirements contained in this Agreement, Tenant shall not store outside of the Tenant Improvements (aircraft hangar) any inoperable equipment, discarded or unsightly materials, materials likely to create a hazard,

trailers (except trailers designed to carry gliders), inoperative motor vehicles, or any other similar items. Tenant is responsible to keep the area five feet out from all four sides of the aircraft hangar clear of weeds and any debris.

K. Operations. Tenant's operations shall comply with the following.

(i) Airport Operations. Tenant shall occupy the Premises and shall operate in a manner that promotes effective Airport operations. Among other things, Tenant shall immediately notify the Airport Manager of any condition observed at the Airport that may create a hazard or disruption; Tenant shall refrain from annoying, disturbing, or impairing Airport customers, tenants, or employees; and Tenant shall promptly respond to City's requests for information and reasonable assistance in connection with planning and other operational matters at the Airport. If City determines for any reason that emergency conditions exist at the Airport, Tenant shall participate in any emergency response as directed by City or other agency in charge and shall operate in a manner that protects safety and the interests of the public.

(ii) Safety. Tenant shall maintain appropriate safety items at the Premises as may be required by the City, Local Fire Authority, or other governmental agency

(iii) Personnel. Tenant shall control the conduct, demeanor, and appearance of its employees and Tenant's Associates so they do not annoy, disturb, or impair Airport customers, tenants, or employees. Tenant shall provide the Airport Manager with the name and contact number of a person who is responsible for and has authority to act on behalf of Tenant.

(iv) Deficiencies. Without limiting or waiving any other remedies available to City, including declaring a breach of this Agreement, City's remedies shall include the following in connection with deficiencies in Tenant's operations.

(a) Propose and Implement Cure. Tenant shall meet with the Airport Manager as he or she may request regarding the quality of Tenant's operations, whether or not in connection with a specific complaint. Tenant shall propose curative measures in response to City's determinations regarding deficiencies in Tenant's operations and shall implement as expeditiously as possible measures that are approved by City.

(b) Remove Employees and Associates. City shall have the right to require Tenant to remove from the Airport any employee or any of Tenant's Associates that City reasonably determines to be in violation of any provision of this Agreement or otherwise detrimental to City's interests at the Airport.

5. City's Rights and Obligations

A. Airport Maintenance. Subject to subparagraph C. of this section, City agrees that as long as the Airport is certified to operate as an airport by the Federal Aviation Administration (or any successor agency), City shall keep the property of the Airport in good repair and free from obstruction in accordance with applicable Federal standards.

B. Access to Premises. City for itself and its employees, officers, directors, agents, and other representatives ("City's Associates") reserves the right to enter the Premises and Tenant Improvements at reasonable times and with reasonable notice for any purpose relating to the Airport including, but not limited to, conducting inspections, determining compliance with this

Agreement, conduct Airport work, or for emergency purposes, provided that they shall not unreasonably interfere with Tenant's use of the Premises or Tenant's Improvements.

C. City's Right to Relocate Tenant's Improvements from Premises. It is understood and agreed that as conditions may require, the City has the right to require Tenant to relocate Tenant's Improvements from the Premises to a new location at a new airport if the City elects to relocate the Airport, which would be comparable to Tenants current leased Premises. Tenant shall bear the costs associated with relocating Tenant's Improvements and property to the new location. City agrees to provide the Tenant with a new Private Hangar Lease Agreement for the new location upon the same terms and conditions as are contained herein for the unexpired term of this Agreement.

D. City Charges. City has the right to impose rates and charges in connection with any matter at the Airport in a manner consistent with Laws and Regulations.

E. City Directives. City is the owner and proprietor of the Airport, and City has the right to issue any lawful, reasonable, and non-discriminatory directive as a landlord and proprietor that City determines to be in City's best interests.

F. Governmental Acts. City is a governmental entity, and City has all rights, powers, immunities, and privileges afforded to it under Laws and Regulations. Tenant agrees that Tenant is subject to any lawful governmental act of City without regard to the provisions of this Agreement.

6. Indemnification, Insurance, and Letter of Credit

A. Indemnity by Tenant. Tenant agrees to indemnify, hold harmless, and defend City and its officers and employees from and against losses of every kind and character (including but not limited to, liabilities, causes of action, losses, claims, costs, fees, attorney fees, expert fees, court of dispute resolution costs, investigation costs, environmental claims, mitigation costs, judgments, settlements, fines, demands, damages, charges, and expenses) that arise out of or relate to: (i) this Agreement; (ii) any use, occupancy, or operations at the Premises or the Airport by Tenant or Tenant's Associates; or (iii) any wrongful, reckless, or negligent act or omission of Tenant or Tenant's Associates. Tenant shall use attorneys, experts, and professionals that are reasonably acceptable to City in carrying out this obligation. This obligation does not require Tenant to indemnify City and its officers and employees against losses (as defined above) that arise solely from the negligent acts or omissions of City and its officers and employees. The obligation stated in this Section 6.A. shall survive the expiration or other termination of this Agreement with respect to matters arising before such expiration or other termination. These duties shall apply whether or not the allegations made are proven to be true.

B. Waiver. Tenant assumes all risk of the use of the Premises and the Airport, and Tenant hereby knowingly, voluntarily, and intentionally waives any and all losses, liabilities, claims, and causes of action, of every kind and character, that may exist now or in the future (including, but not limited to, claims for business interruption and for damage to any aircraft) against City and its officers, employees, and volunteers arising from or related to Tenant's use, occupancy, or operations at the Premises or the Airport.

C. **Insurance**. At Tenant's cost, Tenant shall procure the following insurance coverage prior to entering the Premises, and Tenant shall maintain its insurance coverage in force at all times this Agreement is in effect:

i. Aircraft Liability with Additional Coverage. Aircraft liability insurance that includes premises liability, and, if applicable, mobile equipment coverage with a combined single limit for bodily injury and property damage of not less than one million dollars ($1,000,000) per occurrence (and one hundred thousand dollars ($100,000) per passenger seat for applicable claims), including, but not limited to, contractual liability coverage for Tenant's performance of the indemnity agreement set forth in Section 6.A. If any such coverage is not available to Tenant in the form of an aircraft liability policy, Tenant shall obtain substantially similar coverage through a commercial general liability policy.

ii. Property. Tenant is solely responsible for Tenant's Improvements and Tenant's personal property, and Tenant may purchase insurance for Tenant's Improvements and Tenant's personal property as Tenant may determine.

iii. Automobile. If Tenant drives any automobile other than in the roadways and automobile parking areas at the Airport (including, but not limited to, if Tenant parks an automobile in Tenant's hangar when permitted by this Agreement), comprehensive automobile liability coverage for claims and damage due to bodily injury or death of any person or property damage arising out of Tenant's ownership, maintenance, or use of any motor vehicles, whether owned, hired, or non-owned, of not less than five hundred thousand dollars ($500,000) single combined limit "per accident" for bodily injury and property damage.

iv. Pollution. Tenant is responsible for environmental losses. Any pollution legal liability insurance obtained by Tenant shall comply with the requirements for insurance that are stated in this Agreement. If Tenant engages in self-fueling, Tenant shall comply with City's self-fueling requirements, including, but not limited to, pollution legal liability insurance requirements.

v. Aircraft. Tenant is solely responsible for any damage to the Aircraft. Tenant shall obtain insurance coverage for the Aircraft as Tenant may determine.

vi. Business Interruption. Tenant is solely responsible for all costs of business interruption, however incurred, and Tenant may purchase business interruption insurance as Tenant may determine.

D. Insurance Requirements. The insurance described by this section have the following requirements:

i. General Requirements. At all times when this Agreement is in effect, Tenant shall maintain in force all required insurance coverage and shall have on file with the City Certificates of Insurance evidencing the same. Such certificates shall provide that coverage will not be cancelled, suspended, voided, or reduced without at least thirty (30) days prior written notice to the City. Ratings for the financial strength of the companies providing Tenant's insurance policies shall be disclosed in such certificates and shall be "A- VII" or stronger as published in the latest Best's Key Rating Guide (or a comparable rating from a comparable rating service). If a lower rating is proposed, City may examine the financial strength of the insurance company proposed to provide coverage and may consent to a lower rating in the City's sole and absolute discretion, and City may also require additional assurances from Tenant. All certificates shall be signed by a person authorized by the insurer and licensed by

the State of Utah. All policies (except any policies required for worker's compensation or error s and omissions) and the certificates evidencing coverage shall name City and its officers, employees, and volunteers as additional insureds (or in the case of property coverage, City shall be named as a loss payee). Tenant shall provide for a renewal of all insurance coverage on a timely basis to prevent any lapse in coverage. City retains the right to approve any deductibles, and Tenant shall notify City of any material erosion of the aggregate limits of any policy. Tenant's policies shall be primary. Such policies shall extend insurance to cover Tenant's contractual obligations under this Agreement.

ii. Minimum Requirements. City's insurance requirements are minimum requirements, and Tenant is responsible to obtain adequate insurance coverage as Tenant may determine. Except as otherwise expressly set forth in this Agreement, Tenant assumes all risk under this Agreement (including, but not limited to, business interruption claims) whether or not insured.

iii. Waiver of Subrogation. Notwithstanding any other provision contained in this Agreement, each of the parties hereby waives any rights of subrogation it may have against the other party for loss or damage from any risk that is covered by insurance (including, but not limited to, claims for business interruption). Each of the parties shall obtain a clause or endorsement providing for such waiver of subrogation in any policies of insurance required under this Agreement.

iv. Terms Subject to Change. City, in its sole and absolute discretion, reserves the right to review and adjust at any time Tenant's required insurance limits, types of coverage, and any other terms applicable to insurance to reasonably insure against any risk associated with this Agreement or Tenant's use, occupancy, or operations at the Airport. Among other things, City may review any or all insurance coverage on a periodic basis and in connection with any specific activity or event associated with the Airport or proposed by Tenant.

v. Stopping Operations. Among City's remedies, if at any time Tenant's insurance coverage is not in effect as required herein, City may (but is not required to) stop all or any portion of Tenant's operations without liability to City until Tenant fully restores such coverage.

E. Performance Security. City reserves the right to require a performance security in a form and amount acceptable to City upon any material default by Tenant under this Agreement.

7. Hazardous Materials. Tenant shall not cause or permit any Hazardous Materials to be used, produced, stored, transported, brought upon, or released on , under, or about the premises or the Airport by Tenant or Tenant's Associates in violation of applicable Environmental Laws. Tenant is responsible for any such violation as provided by Section 6.A. of this Agreement. Tenant agrees that in the event of a release or threat of release of any Hazardous Material by Tenant or Tenant's Associates at the Airport, Tenant shall provide City with prompt notice of the same. Tenant shall respond to any such release or threat of release in accordance with applicable Laws and Regulations.

8. Assignment and Subleasing

A. Assignment. Tenant shall not assign any of its rights under this Agreement, including, but not limited to, rights in the Tenant Improvements, (whether such assignment is voluntary or involuntary, by merger, consolidation, dissolution, change in control, or any other

manner), shall not encumber any such rights or record this Agreement (or any document or interest related thereto) and shall not delegate any performance under this Agreement, except with prior written consent of City to any of the same. City will not unreasonably withhold written consent to an assignment of this Agreement.

B. Subleasing. With prior written consent of City, Tenant shall have the right to sublease portions of the Premises and Tenant Improvements only for the purposes specified in this Agreement or to store an aircraft. City shall have the right to approve any sublease tenant and sublease agreement. Tenant shall impose on any approved sublease tenant the same terms set forth in this Agreement to provide for the rights and protections afforded to City. Tenant shall reserve the right to amend any sublease to conform to the requirements of this Agreement, and any sublease shall be consistent with and subordinate to this Agreement as it is amended from time to time. Any sublease shall include an agreement that the sublease will attorn to and pay rent to City if Tenant ceases to be a party to this Agreement. Tenant shall provide to City a copy of any sublease executed by Tenant. No sublease shall relieve Tenant of any obligations under this Agreement.

9. Damage, Destruction, and Condemnation.

A. Damage or Destruction of Premises. If any portion of the Premises or the Tenant Improvements is damaged in any manner, Tenant shall promptly remove from the Airport all debris and cause repairs to be made to restore the same to an orderly and safe condition. All work shall be performed in accordance with plans and specifications that are approved by City as being consistent or better that the original improvements, and Tenant shall follow City's policies and procedures regarding obtaining building permits as necessary. Tenant shall apply all proceeds that are made available from Tenant's insurance policies (or those of any subtenant or assignee) to performing such work. If City performs such work pursuant to Section 10.B, such insurance proceeds shall be paid to City. If the Premises or Tenant Improvements are tenantable despite such damage, Tenant shall not receive any abatement of Tenant's rent obligations. To the extent that any portion is rendered untenantable by such damage in light of the purposes of this Agreement (as determined by City in its sole discretion), rent shall continue if Tenant has business interruption insurance, or if Tenant does not have such insurance, City shall abate Tenant's rent proportionately until repairs have been substantially completed (as determined by City in its sole discretion).

B. Condemnation. In the event of any condemnation proceeding in which all or any part of the Premises is taken (by a condemnor other than the City), all compensation from such proceeding shall be paid to City, except that Tenant may pursue a claim against the condemnor for the value of the Tenant Improvements and Tenant's leasehold interest and any subtenants may pursue a claim against the condemnor for the value of their subtenancy interests. In the event of a partial taking, City shall reduce the ground rent payable by Tenant on a pro rata basis for portions of the premises so taken. If City determines in its sole discretion that all or a material portion of the premises will be (or has been) rendered untenantable as a result of such taking, City may terminate this Agreement by giving Tenant a written notice of termination, and this Agreement shall terminate at time specified in the notice (which shall not be less than sixty (60) days after the date of such notice).

10. Default

A. Tenant's Default. Each of the following events shall constitute a default or breach of this Agreement by the Tenant. (i) Tenant fails to timely pay any installment of rent; (ii) Tenant

violates any requirement under this Agreement (including, but not limited to, abandonment of the Premises) and fails to cure the same within sixty (60) days after written notice thereof by City to Tenant; (iii) Tenant assigns or encumbers any right in this Agreement, delegates any performance hereunder, or subleases any part of the Premises (except as expressly permitted in this Agreement); (iv) Tenant files a petition in bankruptcy, becomes insolvent, or has a petition filed against Tenant in bankruptcy, insolvency, or for reorganization or appointment of a receiver or trustee which is not dismissed within sixty (60) days; (v) Tenant petitions for or enters into an arrangement for the benefit of creditors, or suffers this Agreement to become subject to a writ of execution and such writ is not released within thirty (30) days; or (vi) Tenant defaults in constructing a Tenant Improvement as provided for in this Agreement.

B. Remedies. Upon default by Tenant under this Agreement, City may (at any time) pursue any or all remedies available to City, including, but not limited to, the following: (i) perform in Tenant's stead any obligation that Tenant has failed to perform, and Tenant shall promptly pay to City all costs incurred by City for such performance; (ii) terminate Tenants rights under this Agreement upon delivering a written notice of termination; and (iii) re-enter and take possession of the Premises by any lawful means (with or without terminating this Agreement). Tenant shall pay all costs and damages arising out of Tenant's default, including, but not limited to, the cost of recovering possession of the Premises, the cost of improving and re-letting the Premises, and any attorney fees and costs. Notwithstanding any termination or re-entry, Tenant shall remain liable to pay the rent required under this Agreement for the remaining term of this Agreement, and Tenant shall pay City on demand for any deficiency in the same. No action by City or City's Associates shall be construed as an election by City to terminate this Agreement or accept any surrender of the Premises unless City provides Tenant with a written notice expressly stating that City has terminated this Agreement or accepted a surrender of the Premises. Following a default by Tenant under this Agreement, City shall exercise commercially reasonable, good faith efforts to mitigate its damages as required by applicable Utah law.

C. Default by City. City shall not be in default under this Agreement unless City fails to perform an obligation required of City under this Agreement within thirty (30) days after written notice by Tenant to City. If the nature of City's obligation is such that more than thirty (30) days are reasonably required for performance or cure, City shall not be in default if City commences performance within such thirty (30) day period and thereafter diligently prosecutes the same to completion. In no event may Tenant terminate this Agreement or withhold the payment of rent or other charges provided for in this Agreement as a result of City's default.

D. Survival. The provisions of this Section 10 and the remedies and rights provided in Section 6 shall survive any expiration or termination of this Agreement.

11. <u>Expiration or Termination</u>

A. Tenant's First Right of Refusal. If the City elects to re-let the Premises upon the expiration of this Agreement, and if the Tenant is in compliance with the terms of this Agreement, the Tenant shall have the first right of refusal to enter into a new lease of the Premises upon the terms and conditions as the City Council at the time may require. No sooner than 180 days and no later than 30 days before the end of the term of this Agreement, Tenant shall notify City in writing that Tenant desires to exercise its right of first refusal under this paragraph, after which the Tenant's right of first refusal shall expire. Tenant's refusal to enter into a new lease upon the terms and conditions required by the City Council at the time shall also result in the expiration of Tenant's right of first refusal.

B. Disposition of Tenant Improvements. Upon the termination of this Agreement before or on the expiration date, Tenant shall do one of the following at the option of City: (1) enter into a new lease to relet the Premises pursuant to Tenant's right of first refusal as set out in Section 11.A.; (2) surrender the Tenant Improvements to City if City has determined to accept the Tenant Improvements, with Tenant's rights, title, and interests in the Tenants Improvements being deemed transferred to the City upon the City accepting the same; or (3) remove all Tenant Improvements from the Premises and Airport at Tenant's sole expense in a manner acceptable to City (and the obligations of section 6.A. shall apply to such removal). If Tenant fails to remove any Tenant Improvements under subsection (4), City may do so in any manner acceptable to City pursuant to Section 10.B.

C. Surrender of Premises. Unless the Premises is relet to Tenant prior to the expiration of this Agreement pursuant to Section 11.A., upon any expiration or termination of this Agreement, Tenant, at Tenant's sole cost, shall (i) promptly and peaceably surrender to City the Premises (and any Tenant Improvements accepted by the City pursuant to Section 11.B) "broom clean" and in good order and condition, excepting reasonable wear and tear; (ii) repair in a good and workmanlike manner any damage to the Premises or the Airport that arises from or relates to Tenant's use, occupancy, or operations under this Agreement (including, but not limited to, while removing any property upon expiration or termination); (iii) deliver to City all keys and access credentials relating to the Airport; (iv) perform Tenant's environmental obligations as provided in Section 7; and (v) remove all movable personal property and trade fixtures (including signage) that are not owned by City, (except that Tenant must obtain City's prior written consent to remove any such property if Tenant is in default under this Agreement or if such removal may impair the structure of any building). Upon any expiration or termination of this Agreement (which includes, but is not limited to, termination for abandonment of the Premises), all property that Tenant leaves on the Premises shall conclusively be deemed to have been abandoned and may be appropriated, sold, stored, destroyed, or otherwise disposed of by City without notice to, and without any obligation to account to, Tenant or any other person (except that Tenant Improvements shall be as provided in Section 11.B). Tenant shall pay to City all expenses incurred in connection with the disposition of such property in excess of any amount received by City from such disposition. Tenant shall not be released from Tenant's obligations under this Agreement in connection with surrender of the Premises until City has inspected the Premises and delivered to Tenant a written acceptance of such surrender.

D. Holding Over. If Tenant remains in possession of the Premises after any expiration or termination of this Agreement, such occupancy shall not waive any default under this Agreement and City may terminate such occupancy as a tenancy at will in accordance with Utah Law. During such occupancy, Tenant shall comply will all provisions of this Agreement that are applicable to an at-will-tenancy, and Tenant shall pay the following rent: ground rent at the highest rate then charged at the Airport and rent for the Tenant Improvements at fair market value based on City's survey of rent for similarly situated facilities at the Airport and at other western airports.

E. Survival. The provisions of this Section 11 shall survive any expiration or termination of this Agreement.

12. General Provisions

A. No Exclusive Rights. Nothing in this Agreement shall be construed to grant to Tenant any exclusive right or privilege for the conduct of any activity on the Airport (except to lease the Premises for Tenant's exclusive use as provided herein).

B. Agreement Preserves City's Compliance. This Agreement shall be interpreted to preserve City's rights and powers to comply with City's Federal and other governmental obligations.

C. Subordination to City's Government Commitments. This Agreement is subordinate to the provisions of any agreement between City and the United States or other governmental authority (regardless of when made) that affects the Airport, including, but not limited to, agreements governing the expenditure of Federal funds for Airport Improvements. In the event that the Federal Aviation Administration or other governmental authority requires any modification to this Agreement as a condition of City entering any agreement or participating in any program applicable to the Airport, Tenant agrees to consent to any such modification. If a governmental authority determines that any act or omission of Tenant or Tenant's Associates has caused or will cause City to be non-compliant with any of City's government commitments, Tenant shall immediately take such actions that may be necessary to preserve City's compliance with the same.

D. Subordination to Financing and Matters of Record. This Agreement is subordinate to the provisions of any agreements or indentures entered by City (regardless of when entered) in connection with any debt financing applicable to the Airport and is subordinate to any matter of record affecting the real property of the Airport.

E. Force Majeure. No act or event, whether foreseen or unforeseen, shall operate to excuse Tenant from the prompt payment of rent or any other amounts required to be paid under this Agreement. If City (or Tenant in connection with obligations other than payment obligations) is delayed or hindered in any performance under this Agreement by a force majeure event, such performance shall be excused to the extent so delayed or hindered during the time when such force majeure event is in effect, and such performance shall promptly occur or resume thereafter at the expense of the party so delayed or hindered. A "force majeure event" is an act or event, whether foreseen or unforeseen, that prevents a party in whole or in part from performing as provided in this Agreement, that is beyond the reasonable control of and not the fault of such party, and such party has been unable to avoid or overcome by exercising due diligence, and may include, but is not limited to, acts of nature, war, riots, strikes, accidents, fire, and changes in law.

F. Rights and Remedies. Except as expressly set forth in this Agreement, the rights and remedies set forth in this Agreement are not intended to be exhaustive and the exercise by either party of any right or remedy does not preclude the exercise of any other rights or remedies that may now or subsequently exist.

G. Attorneys Fees. If any action is brought to recover any rent or other amount under this Agreement because of any default under this Agreement, to enforce or interpret any of the provisions of this Agreement, or for the recovery of possession of the Premises, the party prevailing in such action shall be entitled to recovery from the other party(s) reasonable attorneys fees, court costs, the fees of experts and other professionals, and other costs arising from such action (including those arising from any appeal), the amount of which shall be fixed by the court and made a part of any judgment rendered. Tenant shall be responsible for all expenses, including but not limited to, attorney fees incurred by the City in any case or proceeding involving the Tenant or any permitted assignee of Tenant under or related to any bankruptcy or insolvency law. The provisions of this Section 12.G. shall survive any expiration or termination of this Agreement.

H. Governing Law, Venue, and Waiver of Jury Trial. This Agreement and the respective rights and obligations of the parties shall be governed by, interpreted, and enforced in accordance with the Laws of the State of Utah. Venue for any action arising out of or related to this Agreement or actions contemplated hereby may be brought in the United States District Court for Utah or the District Court for the State of Utah sitting in Washington County, Utah so long as one of such courts shall have subject matter jurisdiction over such action or proceeding, and each of the parties hereby irrevocable consents to the jurisdiction of the same and of the appropriate appellate courts there from. Process in any such action may be served on any party anywhere in the world. CITY AND TENANT EACH KNOWINGLY, VOLUNTARILY, AND INTENTIONALLY WAIVES ITS RIGHT TO TRIAL BY JURY IN ANY ACTION, PROCEEDING, OR COUNTERCLAIM BROUGHT BY EITHER OF THEM AGAINST THE OTHER FOR ALL MATTERS ARISING OUT OF OR RELATING TO THIS LEASE OR ANY USE, OCCUPANCY, OR OPERATIONS AT THE PREMISES OR THE AIRPORT. The provisions of this Section 12.H. shall survive any expiration or termination of this Agreement.

I. Amendments and Waivers. No amendment to this Agreement shall be binding on City or Tenant unless reduced to writing and signed by both parties. No provision of this Agreement may be waived, except pursuant to a writing executed by the party against whom the waiver is sought to be enforced.

J. Severability. If any provision of this Agreement is determined to be invalid, illegal, or unenforceable, the remaining provisions of this Agreement shall remain in full force and effect if both the economic and legal substance of the transactions that this Agreement contemplates are not affected in any manner materially adverse to any part. If any provision of this Agreement is held invalid, illegal, or unenforceable, the parties shall negotiate in good faith to modify this Agreement to fulfill as closely as possible the original intents and purposes of this Agreement.

K. Merger. This Agreement constitutes the final, complete, and exclusive agreement between the parties on the matters contained in this Agreement. All prior and contemporaneous negotiations and agreements between the parties on the matters contained in this Agreement are expressly merged into and superseded by this Agreement. In entering into this Agreement, neither party has relied on any statement, representation, warranty, now agreement of the other party except for those expressly contained in this Agreement. Any proposal materials or exhibits submitted by Tenant in response to a solicitation by City, to the extent accepted by City, shall also be incorporated in this Agreement.

L. Confidentiality. Tenant acknowledges that City is subject to legal requirements regarding the public disclosure of records. Tenant shall comply with such laws in connection with making any request that City maintain a record confidentially, and if Tenant complies with the same, Tenant shall have the right to defend any such request for confidentiality at Tenant's expense.

M. Relationship of Parties. This Agreement does not create any partnership, joint venture, employment, or agency relationship between the parties. Nothing in this Agreement shall confer upon any other person or entity any right, benefit, or remedy of any nature.

N. Further Assurances. Each party shall execute any document or take any action that may be necessary or desirable to consummate and make effective a performance that is required under this Agreement.

O. Miscellaneous. The headings in this Agreement are provided for convenience only and do not affect this Agreement's construction or interpretation. All references to Sections are to Sections in this Agreement. Each provision to be performed by Tenant shall be construed as both a covenant and a condition. This Agreement shall be construed without regard to any presumption or rule requiring construction or interpretation against the drafting party. If Tenant consists of more than one individual or entity, the obligations of all such individuals and entities shall be joint and several. References in this Agreement to any period of days shall mean calendar days unless specifically stated otherwise.

P. Time is of the Essence. Time is of the essence in this Agreement.

Q. Notices. Any notice, demand, written consent, or other communication required to be in writing under this Agreement shall be given in writing by personal delivery, express mail (postage prepaid), nationally recognized overnight courier with all fees prepaid (such as, by way of example, Federal Express or UPS), or certified mail (return receipt requested and postage prepaid) when addressed to the respective parties as follows.

If to City:

Hurricane City
City Attorney
147 N. 870 W.
Hurricane, UT 84737

If to Tenant:

Brent Huddleston
2530 E. 4000 N.
Filer, ID 83328

Either City or Tenant may change its notice address by giving written notice (as provided herein) of such change to the other party. Any notice, demand, or written consent or communication shall be deemed to have been given, and shall be effective, upon compliance with this Section 12.Q. and delivery to the notice address then in effect for the party to which the notice is directed; provided, however, that such delivery shall not be defeated or delayed by any refusal to accept delivery or an inability to effect delivery because of an address change that was not properly communicated.

R. Binding Obligation. Tenant warrants and represents that it has the right, power, and legal capacity to enter into and perform its obligations under this Agreement as a legal, valid, and binding obligation of Tenant.

S. City Approval and Consent. Wherever in this Agreement it specifies the City must give approval or consent by the terms of this Agreement, such approval or consent shall not be unreasonably withheld. Unless otherwise specified, approval, consent, or action by the City refers to approval or consent by the Hurricane City Council.

T. Personal Guaranty. The undersigned Guarantor does herewith personally guarantee the due performance of this Agreement regarding all its provisions and obligations in the same way as if Guarantor were the original Tenant of this Agreement. This guaranty is continuing and unconditional. The undersigned Guarantor shall be liable as a principal debtor and not merely as surety, and the bankruptcy or any assignment in favor of creditors of Tenant shall not affect the enforceability of this Personal Guaranty. This Personal Guaranty shall bind the respective heirs, executors, administrators, and assigns of the undersigned Guarantor, and shall inure to the benefit of the City, its successors, assigns, and subrogees. Guarantor now waives and releases all benefits and relief from all and any appraisement, exemption, or stay laws of any state currently in force or passed in the future.

IN WITNESS WHEREOF, the parties hereto have executed this Agreement as of the date first written above.

HURRICANE CITY

_____
Nanette Billings, Mayor

Attest:

_____
City Recorder

Approved as to form:

_____
Dayton Hall, City Attorney

BRENT HUDDLESTON

_____
By: Brent Huddleston

GUARANTOR

_____
Printed Name: Brent Huddleston

HURRICANE CITY
UTAH

STAFF COMMENTS

Consideration and possible approval of a **new hangar pad located at 2N 2E at the City Airport together with a new Private Hangar Lease Agreement** for Sunnie, LLC. -Dave Houston/Scott Stratton

Discussion:

Background:

Scott Stratton is requesting that a new hangar pad be created at the City Airport and that he be given a new Private Hangar Lease Agreement authorizing him to develop the pad and construct a hangar. The location of the proposed hangar pad is consistent with the Airport Layout Plan. Mr. Stratton's proposed lease agreement deviates from the lease template previously approved by the City Council in one way. The approved template requires that construction drawings for the hangar be submitted within eight months and that the hangar be completed within two years, but Mr. Stratton is requesting that the construction timeline in the lease be extended. Mr. Stratton is requesting that his deadline to submit construction plans be four years, with construction being completed within eight months of the building permit being issued.

Applicable City Ordinances:

The Airport Board "shall function in an advisory capacity to the City Council on all issues regarding the operation" of the airport. HCC 2-1-1(A). The Airport Board "shall operate solely as an advisory board to the City Council and shall have no power or authority to take any action or make any decision which would or which may have the effect of creating a liability for the City." HCC 2-1-1(B). "It shall be the duty of the Board to review and recommend approval or disapproval of any agreement for the lease of property at the airport and the proposed use of each parcel of leased land." HCC 2-1-1. After a recommendation from the Airport Board, the proposal is forwarded to the Council for a final decision.

Recommendation:

The Airport Board discussed this item on February 20, 2024, and unanimously recommended approval. The Airport Board specifically recommended that the construction timeline in the lease template be modified and extended as requested by Mr. Stratton.

Attachments in the Packet:

1. Airport Layout Plan
2. Proposed Private Hangar Lease Agreement

Legal Review:

The City Attorney approves the form of the proposed lease.

-This summary was drafted by Dayton Hall, City Attorney.

Findings:

Recommendation:

Attachments:

1. Updated Airport Master Plan (PDF)
2. 240220 HURRICANE AIRPORT - PRIVATE HANGAR LEASE AGREEMENT (Sunnie LLC)

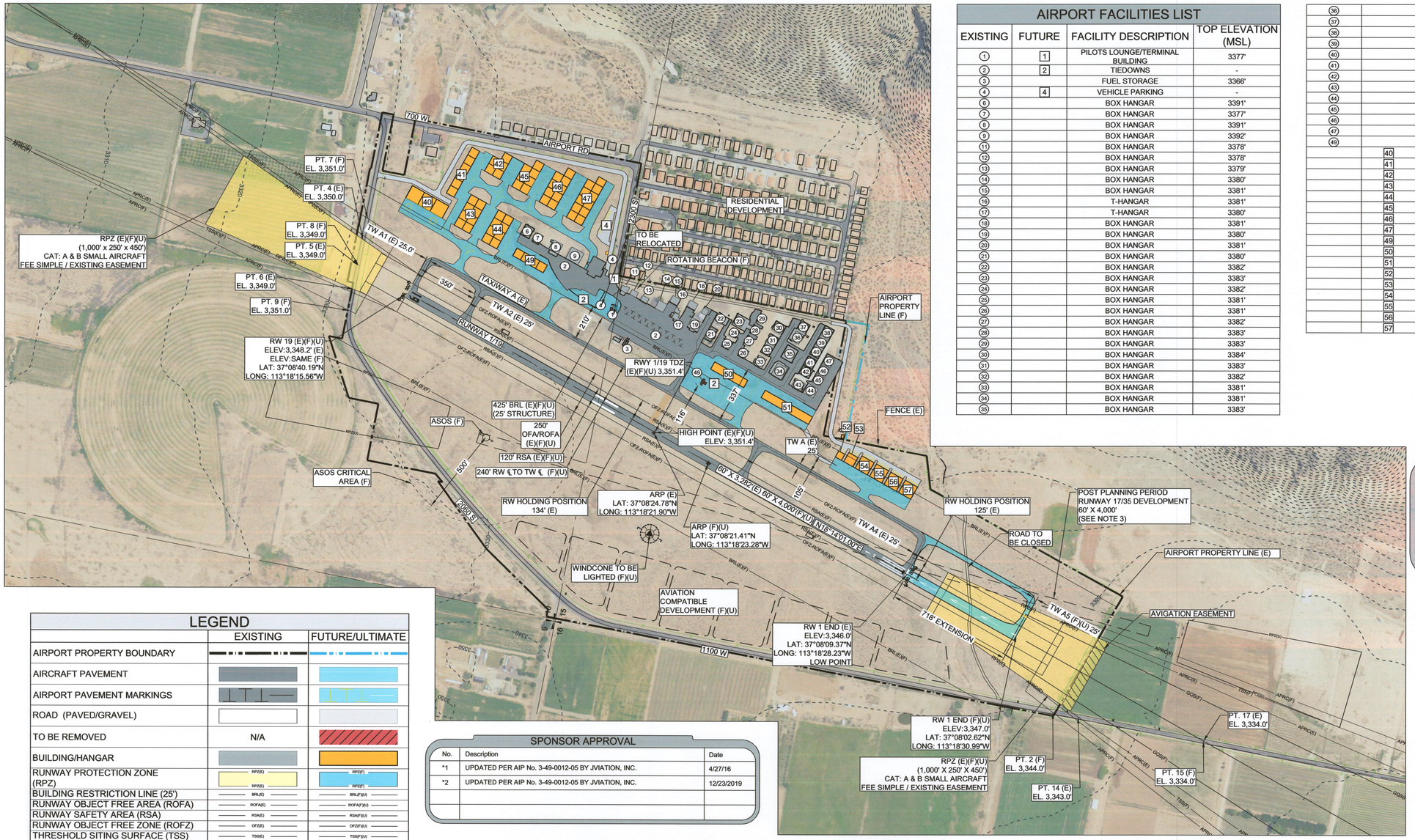

AIRPORT FACILITIES LIST

EXISTING	FUTURE	FACILITY DESCRIPTION	TOP ELEVATION (MSL)
1	1	PILOTS LOUNGE/TERMINAL BUILDING	3377'
2	2	TIEDOWNS	-
3		FUEL STORAGE	3366'
4	4	VEHICLE PARKING	-
6		BOX HANGAR	3391'
7		BOX HANGAR	3377'
8		BOX HANGAR	3391'
9		BOX HANGAR	3392'
11		BOX HANGAR	3378'
12		BOX HANGAR	3378'
13		BOX HANGAR	3379'
14		BOX HANGAR	3380'
15		BOX HANGAR	3381'
16		T-HANGAR	3381'
17		T-HANGAR	3380'
18		BOX HANGAR	3381'
19		BOX HANGAR	3380'
20		BOX HANGAR	3381'
21		BOX HANGAR	3380'
22		BOX HANGAR	3382'
23		BOX HANGAR	3383'
24		BOX HANGAR	3382'
25		BOX HANGAR	3381'
26		BOX HANGAR	3381'
27		BOX HANGAR	3382'
28		BOX HANGAR	3383'
29		BOX HANGAR	3383'
30		BOX HANGAR	3384'
31		BOX HANGAR	3383'
32		BOX HANGAR	3382'
33		BOX HANGAR	3381'
34		BOX HANGAR	3381'
35		BOX HANGAR	3383'
36		BOX HANGAR	3383'
37		BOX HANGAR	3384'
38		BOX HANGAR	3385'
39		BOX HANGAR	3385'
40		BOX HANGAR	3384'
41		BOX HANGAR	3383'
42		BOX HANGAR	3382'
43		BOX HANGAR	3382'
44		BOX HANGAR	3382'
45		BOX HANGAR	3382'
46		BOX HANGAR	3383'
47		BOX HANGAR	3383'
49		T-HANGAR	TO BE REMOVED
	40	BOX HANGAR (80' x 80')	3385'
	41	BOX HANGAR (50' x 50')	3370'-3371'
	42	BOX HANGAR (50' x 50')	3362'-3363'
	43	BOX HANGAR (50' x 50')	3361'-3362'
	44	BOX HANGAR (50' x 50')	3361'-3362'
	45	BOX HANGAR (50' x 50')	3364'-3365'
	46	BOX HANGAR (50' x 50')	3366'-3367'
	47	BOX HANGAR (50' x 50')	3364'
	49	BOX HANGAR (50' x 50')	3368'
	50	SHADE/T-HANGARS	3390'
	51	SHADE/T-HANGARS	3389'
	52	BOX HANGAR (40' x 40')	3372'
	53	BOX HANGAR (60' x 60')	3385'
	54	BOX HANGAR (80' x 80')	3385'
	55	BOX HANGAR (80' x 80')	3384'
	56	BOX HANGAR (80' x 80')	3384'
	57	BOX HANGAR (80' x 80')	3383'

LEGEND

	EXISTING	FUTURE/ULTIMATE
AIRPORT PROPERTY BOUNDARY		
AIRCRAFT PAVEMENT		
AIRPORT PAVEMENT MARKINGS		
ROAD (PAVED/GRAVEL)		
TO BE REMOVED	N/A	
BUILDING/HANGAR		
RUNWAY PROTECTION ZONE (RPZ)	RPZ(E) RPZ(E)	RPZ(F) RPZ(F)
BUILDING RESTRICTION LINE (25')	BRL(E)	BRL(F)(U)
RUNWAY OBJECT FREE AREA (ROFA)	ROFA(E)	ROFA(F)(U)
RUNWAY SAFETY AREA (RSA)	RSA(E)	RSA(F)(U)
RUNWAY OBJECT FREE ZONE (ROFZ)	OFZ(E)	OFZ(F)(U)
THRESHOLD SITING SURFACE (TSS)	TSS(E)	TSS(F)(U)
APPROACH SURFACE	APRC(E)	APRC(F)(U)
GLIDEPATH QUALIFICATION SURFACE	N/A	GQS(F)(U)
FENCE (8' HEIGHT OR LESS)		N/A
ROTATING BEACON	N/A	
PAPI	N/A	
WINDCONE/SEGMENTED CIRCLE		SAME
AIRPORT REFERENCE POINT		
THRESHOLD LIGHTS	N/A	0000 0000
REILS	N/A	
ASOS	N/A	

SPONSOR APPROVAL

No.	Description	Date
*1	UPDATED PER AIP No. 3-49-0012-05 BY JVIATION, INC.	4/27/16
*2	UPDATED PER AIP No. 3-49-0012-05 BY JVIATION, INC.	12/23/2019

FAA APPROVAL

CONDITIONALLY APPROVED
SUBJECT TO LETTER DATED _____

_____

FEDERAL AVIATION ADMINISTRATION
DENVER AIRPORTS DISTRICT OFFICE

Date _____

CASE NO. _____

SPONSOR APPROVAL

MAYOR, CITY OF HURRICANE DATE

NOTES:

1. BUILDING RESTRICTION LINE (BRL) DEPICTS REQUIRED SETBACKS FOR A TYPICAL 35' STRUCTURE. HEIGHTS OF EXISTING AND FUTURE BUILDINGS WITHIN THE BRL REMAIN CLEAR OF THE OFA'S AND AREA BELOW THE 7:1 TRANSITIONAL SURFACE (OR ARE OBSTRUCTION MARKED AND LIGHTED ACCORDINGLY).
2. ALL HANGARS HAVE AN ASSUMED 21' HEIGHT ADDED TO THE GROUND ELEVATION TO OBTAIN TOP ELEVATION.
3. POST PLANNING RUNWAY 17/35 DEPICTED AS PREFERRED LONG-TERM RUNWAY REALIGNMENT OPTION IN ORDER TO PROTECT AND PLAN FUTURE LANDSIDE DEVELOPMENT.
4. PER 14 CFR PART 77, SURFACE TRANSPORTATION ENTITIES' ELEVATION INCLUDE AN ADJUSTMENT FOR OBSTRUCTION ANALYSES PURPOSES (23 FEET FOR RAILWAYS, 17 FEET FOR INTERSTATE HIGHWAYS, AND 15 FEET FOR ALL OTHER PUBLIC ROADS)

SOURCE:

1. THIS EXHIBIT WAS ORIGINALLY CREATED BY ARMSTRONG CONSULTANTS IN NOVEMBER 2012 AND THIS ISSUE REPRESENTS AN UPDATED GEOMETRY BY JVIATION, INC. TO INCLUDE CHANGES TO THE AIRPORT RESULTING FROM DESIGN AND CONSTRUCTION COMPLETED WITHIN AIP NO. 05
2. OBJECT ELEVATIONS ARE ESTIMATED AND NOT BASED ON A SURVEY
3. PAPIs AND RUNWAY LIGHTING TO BE INSTALLED AT AN INTERIM PERIOD, BEFORE RUNWAY EXTENSION

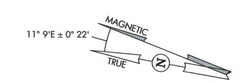

GRAPHIC SCALE
0 150 300 600
(IN FEET)

DATE: 12/2019
ANNUAL RATE OF CHANGE: 0°6'W
SOURCE: U.S. NOAA

L:\16\AIP UPDATED 2019\PLANS\
03-1L8-ALP-ALP-UPDATED.dwg
Oct 07, 2020 – 3:04pm
jymbolenon

JVIATION®

HURRICANE

GENERAL DICK
STOUT FIELD
HURRICANE, UTAH

DES: S.G.J.
DR: S.G.J.
CH: T.G.D.
APP: T.G.D.

ISSUE RECORD

NO.	BY	DATE	DESCRIPTION
1	S.G.J.	DEC 2019	AS-BUILTS WITH FUTURE EDITS

AIRPORT
LAYOUT PLAN

AIRPORT LAYOUT PLAN -
EXISTING, FUTURE, AND ULTIMATE

AIP PROJ. NO.	JVIATION PROJ. NO.	DATE:
3-49-0012-007-2018	2018.1L8.02	FEBRUARY 2020

SHEET NO.
03 of 16

PRIVATE HANGAR LEASE AGREEMENT

BETWEEN

HURRICANE CITY, UTAH

AND

SUNNIE, LLC

Effective Date: March 7, 2024

PRIVATE HANGAR LEASE AGREEMENT

THIS PRIVATE HANGAR LEASE AGREEMENT (which, as amended from time to time, is defined herein as the ("Agreement") is entered into as of the 7th day of March, 2024, by and between Hurricane City, Utah, a Utah municipal corporation, (the "City") and Sunnie, LLC, a Utah limited liability company, (the "Tenant").

RECITALS

WHEREAS, City owns and operates an airport located at 800 W. 2300 S., Hurricane, Utah 84737 (the "Airport"); and

WHEREAS, City and Tenant desire to accommodate, promote, and enhance general aviation at the Airport; and

WHEREAS, Tenant desires to lease certain real property at the Airport for the purpose of constructing or purchasing a private hangar for aircraft as provided in this Agreement;

NOW, THEREFORE, in consideration of the covenants and conditions stated herein, the sufficiency of which is hereby acknowledged, the parties agree as follows:

1. Agreement to Lease and Operate Concession

A. Agreement to Lease Premises. City hereby leases to Tenant and Tenant hereby leases from City that certain real property 4,550 square feet in size including five feet beyond the hangar pad on three sides excluding the front and located at the property identified as 2N NE on the Airport property (the "Premises"). The size of the leased property is to accommodate a 60'x60' hangar. Tenant agrees to accept the Premises "as is" and City makes no warranty as to the condition of the Premises or its suitability for any particular purpose.

B. Disclosure of Soil Condition. City discloses to Tenant that the soil at the Airport is collapsible and otherwise unstable. Tenant is responsible to obtain appropriate soil evaluation reports, to adhere to the recommendations in the reports, and take whatever action is necessary to mitigate the soil condition on the Premises. Tenant is responsible to construct the hangar at the engineered drainage elevations so the drainage will flow properly. Tenant will maintain and keep the area around the premises clear of debris and obstructions so as not to cause disruption in the expected normal drainage flow.

C. Construction of Tenant Improvements. Tenant shall construct or purchase and maintain continuous improvements on the leased Premises, which shall include a concrete pad, an aircraft hangar, fixtures, and any utilities as may be necessary for the Tenant's aviation related activities (referred to herein as the "Tenant Improvements"). Such Tenant Improvements must meet the Airport's Building Development Standards and any applicable Federal Aviation Administration requirements in effect as of the date of this Agreement. The Tenant agrees to submit plans/drawings of the proposed Tenant Improvements to City within four (4) years of the execution date of this Agreement. Tenant shall be responsible to obtain and pay for proper building permits for the Tenant Improvements and comply with all the applicable ordinances of the City when planning and constructing the Tenant Improvements. Tenant agrees to complete construction of the proposed Tenant Improvements within eight (8) months from the date the building permit is issued.

D. Grant of Concession and Purpose of Agreement. Tenant agrees that it shall have the right, privilege, and obligation to use the Premises for the following purposes: The parking, storage, service, repair, light maintenance, operation, and modification or construction (on a noncommercial basis only) of Aircraft, plus incidental activities related to such purposes. An ("Aircraft") shall be any aircraft that Tenant owns or controls, or that is subject to an authorized sublease, when approved in writing in advance by City. Tenant shall provide to City the make, model, and registration number of any Aircraft owned or controlled by Tenant, or that are subject to an authorized sublease, that are based at the Premises.

E. Access. City agrees that if Tenant is not in breach of this Agreement, Tenant and Tenant's employees, officers, directors, subtenants that are approved by City pursuant to this Agreement, contractors, subcontractors, suppliers, agents, invitees, and other representatives ("Tenant's Associates") may ingress and egress across the Airport in the areas designated by City and as permitted by applicable Laws and Regulations, on a non-exclusive basis and to the extent reasonably necessary for Tenant's use, occupancy, and operations at the Premises.

F. Right of Flight and Other Reserved Rights. This Agreement conveys only a leasehold interest in the Premises on the terms and for the purposes provided herein, and it conveys no other rights, titles, or interest of any kind. City reserves rights in the Premises including but not limited to, a right of aircraft movement on Airport property, a right of flight for the passage of aircraft in the air, a right to cause such noise as may at any time be inherent in the operation of aircraft, subject to the rules, regulations, and policies as may be adopted from time to time by the City, and rights in water, minerals, oil, and gas.

G. Enjoyments of Rights. Subject to Tenant's complete performance of the payment and other obligations contained in this Agreement, Tenant shall enjoy the rights, uses, and privileges stated in this Agreement.

2. Term. The term of this Agreement shall commence on the date of execution of this Agreement and shall continue thereafter for a term of twenty (20) years until March 7, 2044, (the "Initial Term"). If the tenant desires to renew this Agreement, the tenant must notify the City in writing at least 60 days prior to the expiration of the initial term. Upon such notification, this lease shall renew for an additional five (5) year period at the lease rates stated in Section 3 of this Agreement.

3. Rent

A. Rent. For Tenant's lease of the Premises, Tenant covenants to pay to City without off-set or deduction the annual ground rent as shown in the table below and commencing on the date of execution of this Agreement. All rent shall be due and payable to the City of Hurricane annually in advance, without notice or demand from City, on the 1st day of August. The first year's rent payment will be prorated to the next August 1st payment date.

Years	Rent amount per square foot
2022 – 2027	.15
2028 – 2033	.18
2034 – 2039	.21
2040 – 2045	.24
2046 – 2051	.27
2052 – 2057	.30

2058 – 2063 .33

C. Dishonored Checks. If any check paid on behalf of Tenant is dishonored or returned by a bank for any reason, Tenant shall pay all charges assessed to City by the bank plus a service charge of fifty dollars ($50.00) per occurrence (or such other amount as City shall implement from time to time) in addition to other sums due under this Agreement.

D. Past Due Amounts. If tenant fails to pay when due any amount required to be paid by Tenant under this Agreement, such unpaid amount shall bear interest at the rate of eighteen percent (18%) from the due date of such amount to the date of payment in full, with interest. In addition, City may charge a sum of five percent (5%) of such unpaid amount as a service fee, which the parties agree is a reasonable amount to cover the additional costs for billing and collecting arising from Tenants failure to make payment in a timely manner. All amounts due under this Agreement are and shall be deemed to be rent, and shall be paid without abatement, deduction, off-set, prior notice, or demand (unless expressly provided by the terms of this Agreement). City's acceptance of any past due amount either full or partial (or its associated interest or service fee) shall not constitute a waiver of any default under this Agreement.

4. Tenant's Use of Premises and Airport

A. No Interference. Tenant and Tenant's Associates shall not use the Premises or the Airport in any manner that interferes with any operation at the Airport or decreases the Airport's effectiveness, as reasonably determined by the City at its sole discretion. Tenant shall promptly notify City of any use that creates such interference or decrease of effectiveness and remedy the same to City's satisfaction.

B. Comply with all Laws and Regulations. Tenant and Tenant's Associates shall comply at all times, at Tenant's sole cost, with any and all laws and regulations (as amended or otherwise modified from time to time) that are applicable to Tenant's use, occupancy, or operations at the Premises or the Airport (the "Laws and Regulations"), which include but are not limited to, the Airport Rules and Regulations, Policies and Procedures, Minimum Standards for Commercial Aeronautical Activities, Utah Code Annotated, the Code of Revised Ordinances of Hurricane City, the Protective Covenants of the Hurricane City Airport, applicable Federal Aviation Regulations, and all lawful, reasonable, and nondiscriminatory Airport policies and other requirements.

C. No Unauthorized Use. Tenant and Tenant's Associates shall use the Premises and the Airport only for purposes that are expressly authorized by this Agreement and shall not engage in any unauthorized use of the same. Unauthorized uses include, but are not limited to, any use that would damage, interfere with, or alter any improvement; restricting access on any road or other area that Tenant does not lease; placing waste materials on the Airport or disposing of such materials in violation of any Laws and Regulations; any use that would constitute a public or private nuisance or a disturbance or annoyance to other Airport users; the use of automobile parking areas in a manner not authorized by City; fueling activities on the Premises or any other area that City has not authorized; commercial activities, aircraft parking, or storage in areas not leased by Tenant, any use unrelated to the purposes of this Agreement; and any use that would be prohibited by or would impair coverage under either party's insurance policies.

D. Permits and Licenses. Tenant shall obtain and maintain in current status all permits and licenses that are required under any Laws and Regulations in connection with Tenant's use,

occupancy, or operations at the Premises or the Airport. In the event that Tenant receives notice from any governmental authority that Tenant lacks, or is in violation of, any such permit or license, Tenant shall provide City with timely written notice of the same.

E. Taxes and Liens. Tenant shall pay (before their respective due dates) all taxes, fees, assessments, and levies that relate to Tenant's use, occupancy, or operations at the Premises or the Airport and all other obligations for which a lien may be created relating thereto (including, but not limited to, utility charges and work for the Tenant Improvements). Within ten (10) days of notice of such lien, Tenant shall have the lien removed or deposit with the City cash or other security acceptable to City in an amount sufficient to cover the cost of removing such lien. When contracting for any work in connection with the Premises, Tenant shall include in such contract a provision prohibiting the contractor or any subcontractor or supplier from filing a lien or asserting a claim against City's real property or any interest therein.

F. Damage to Property and Notice of Harm. Tenant, at Tenant's sole cost, shall repair or replace to City's satisfaction any damaged property that belongs to City or City's other Tenants to the extent that such damage arises from or relates to an act or omission of Tenant or Tenant's Associates. Tenant shall promptly notify City of any such property damage. If Tenant discovers any other potential claims or losses that may affect City, Tenant shall promptly notify City of the same.

G. No Alterations or Improvements. Tenant shall not make or cause to be made any alterations or improvements to the Premises or to other areas of the Airport without City's prior written consent.

H. Security. Tenant is responsible to comply, at Tenants sole cost, with all security measures that City, Federal Aviation Administration, the United States Transportation Security Administration or any other governmental authority having jurisdiction may require in connection with the Airport. Tenant shall protect and preserve security at the Airport, including, but not limited to, protecting security information and protecting any access points to the Airport that are maintained by Tenant. Tenant will be vigilant in watching for unusual activity or persons that do not belong at the Airport, and will report such to the Airport Manager or by calling 1-866-GA-SECURE.

I. Removal of Disabled or Derelict Aircraft. Tenant shall promptly remove or cause to be removed from any portion of the Airport not leased by Tenant the Aircraft (or any other aircraft that Tenant owns or controls) if it becomes disabled or derelict. Tenant may store such aircraft within the Tenant Improvements or, with the City's prior written consent, elsewhere at the Airport on terms and conditions established by City. If Tenant fails to comply with this requirement after a written request by City to comply, City may (but is not required to) cause the removal of any such aircraft at Tenant's expense by any means that City determines to be in City's best interests.

J. Maintenance, Repair, Utilities, and Storage. Tenant's use, occupancy, and operations at the Premises shall be without cost or expense to the City. Tenant shall be solely responsible to design and construct the Tenant Improvements and to maintain, repair, reconstruct, and operate the Premises and the Tenant Improvements at Tenant's sole cost and expense, including, but not limited to, all utility services, janitorial services, waste disposal, and ramp repair. Tenant shall at all times maintain the Premises and the Tenant Improvements in a condition that is clean, safe, sanitary, and in good repair. Tenant shall perform all work in accordance with Laws and Regulations and in a good and workmanlike manner. City has sole

discretion to determine the quality of the work. Tenant shall promptly remedy any condition that fails to meet this standard. In addition to other restrictions and requirements contained in this Agreement, Tenant shall not store outside of the Tenant Improvements (aircraft hangar) any inoperable equipment, discarded or unsightly materials, materials likely to create a hazard, trailers (except trailers designed to carry gliders), inoperative motor vehicles, or any other similar items. Tenant is responsible to keep the area five feet out from all four sides of the aircraft hangar clear of weeds and any debris.

K. Operations. Tenant's operations shall comply with the following.

(i) Airport Operations. Tenant shall occupy the Premises and shall operate in a manner that promotes effective Airport operations. Among other things, Tenant shall immediately notify the Airport Manager of any condition observed at the Airport that may create a hazard or disruption; Tenant shall refrain from annoying, disturbing, or impairing Airport customers, tenants, or employees; and Tenant shall promptly respond to City's requests for information and reasonable assistance in connection with planning and other operational matters at the Airport. If City determines for any reason that emergency conditions exist at the Airport, Tenant shall participate in any emergency response as directed by City or other agency in charge and shall operate in a manner that protects safety and the interests of the public.

(ii) Safety. Tenant shall maintain appropriate safety items at the Premises as may be required by the City, Local Fire Authority, or other governmental agency

(iii) Personnel. Tenant shall control the conduct, demeanor, and appearance of its employees and Tenant's Associates so they do not annoy, disturb, or impair Airport customers, tenants, or employees. Tenant shall provide the Airport Manager with the name and contact number of a person who is responsible for and has authority to act on behalf of Tenant.

(iv) Deficiencies. Without limiting or waiving any other remedies available to City, including declaring a breach of this Agreement, City's remedies shall include the following in connection with deficiencies in Tenant's operations.

(a) Propose and Implement Cure. Tenant shall meet with the Airport Manager as he or she may request regarding the quality of Tenant's operations, whether or not in connection with a specific complaint. Tenant shall propose curative measures in response to City's determinations regarding deficiencies in Tenant's operations and shall implement as expeditiously as possible measures that are approved by City.

(b) Remove Employees and Associates. City shall have the right to require Tenant to remove from the Airport any employee or any of Tenant's Associates that City reasonably determines to be in violation of any provision of this Agreement or otherwise detrimental to City's interests at the Airport.

5. City's Rights and Obligations

A. Airport Maintenance. Subject to subparagraph C. of this section, City agrees that as long as the Airport is certified to operate as an airport by the Federal Aviation Administration (or any successor agency), City shall keep the property of the Airport in good repair and free from obstruction in accordance with applicable Federal standards.

B. Access to Premises. City for itself and its employees, officers, directors, agents, and other representatives ("City's Associates") reserves the right to enter the Premises and Tenant Improvements at reasonable times and with reasonable notice for any purpose relating to the Airport including, but not limited to, conducting inspections, determining compliance with this Agreement, conduct Airport work, or for emergency purposes, provided that they shall not unreasonably interfere with Tenant's use of the Premises or Tenant's Improvements.

C. City's Right to Relocate Tenant's Improvements from Premises. It is understood and agreed that as conditions may require, the City has the right to require Tenant to relocate Tenant's Improvements from the Premises to a new location at a new airport if the City elects to relocate the Airport, which would be comparable to Tenants current leased Premises. Tenant shall bear the costs associated with relocating Tenant's Improvements and property to the new location. City agrees to provide the Tenant with a new Private Hangar Lease Agreement for the new location upon the same terms and conditions as are contained herein for the unexpired term of this Agreement.

D. City Charges. City has the right to impose rates and charges in connection with any matter at the Airport in a manner consistent with Laws and Regulations.

E. City Directives. City is the owner and proprietor of the Airport, and City has the right to issue any lawful, reasonable, and non-discriminatory directive as a landlord and proprietor that City determines to be in City's best interests.

F. Governmental Acts. City is a governmental entity, and City has all rights, powers, immunities, and privileges afforded to it under Laws and Regulations. Tenant agrees that Tenant is subject to any lawful governmental act of City without regard to the provisions of this Agreement.

6. Indemnification, Insurance, and Letter of Credit

A. Indemnity by Tenant. Tenant agrees to indemnify, hold harmless, and defend City and its officers and employees from and against losses of every kind and character (including but not limited to, liabilities, causes of action, losses, claims, costs, fees, attorney fees, expert fees, court of dispute resolution costs, investigation costs, environmental claims, mitigation costs, judgments, settlements, fines, demands, damages, charges, and expenses) that arise out of or relate to: (i) this Agreement; (ii) any use, occupancy, or operations at the Premises or the Airport by Tenant or Tenant's Associates; or (iii) any wrongful, reckless, or negligent act or omission of Tenant or Tenant's Associates. Tenant shall use attorneys, experts, and professionals that are reasonably acceptable to City in carrying out this obligation. This obligation does not require Tenant to indemnify City and its officers and employees against losses (as defined above) that arise solely from the negligent acts or omissions of City and its officers and employees. The obligation stated in this Section 6.A. shall survive the expiration or other termination of this Agreement with respect to matters arising before such expiration or other termination. These duties shall apply whether or not the allegations made are proven to be true.

B. Waiver. Tenant assumes all risk of the use of the Premises and the Airport, and Tenant hereby knowingly, voluntarily, and intentionally waives any and all losses, liabilities, claims, and causes of action, of every kind and character, that may exist now or in the future (including, but not limited to, claims for business interruption and for damage to any aircraft)

against City and its officers, employees, and volunteers arising from or related to Tenant's use, occupancy, or operations at the Premises or the Airport.

C. **Insurance**. At Tenant's cost, Tenant shall procure the following insurance coverage prior to entering the Premises, and Tenant shall maintain its insurance coverage in force at all times this Agreement is in effect:

i. Aircraft Liability with Additional Coverage. Aircraft liability insurance that includes premises liability, and, if applicable, mobile equipment coverage with a combined single limit for bodily injury and property damage of not less than one million dollars ($1,000,000) per occurrence (and one hundred thousand dollars ($100,000) per passenger seat for applicable claims), including, but not limited to, contractual liability coverage for Tenant's performance of the indemnity agreement set forth in Section 6.A. If any such coverage is not available to Tenant in the form of an aircraft liability policy, Tenant shall obtain substantially similar coverage through a commercial general liability policy.

ii. Property. Tenant is solely responsible for Tenant's Improvements and Tenant's personal property, and Tenant may purchase insurance for Tenant's Improvements and Tenant's personal property as Tenant may determine.

iii. Automobile. If Tenant drives any automobile other than in the roadways and automobile parking areas at the Airport (including, but not limited to, if Tenant parks an automobile in Tenant's hangar when permitted by this Agreement), comprehensive automobile liability coverage for claims and damage due to bodily injury or death of any person or property damage arising out of Tenant's ownership, maintenance, or use of any motor vehicles, whether owned, hired, or non-owned, of not less than five hundred thousand dollars ($500,000) single combined limit "per accident" for bodily injury and property damage.

iv. Pollution. Tenant is responsible for environmental losses. Any pollution legal liability insurance obtained by Tenant shall comply with the requirements for insurance that are stated in this Agreement. If Tenant engages in self-fueling, Tenant shall comply with City's self-fueling requirements, including, but not limited to, pollution legal liability insurance requirements.

v. Aircraft. Tenant is solely responsible for any damage to the Aircraft. Tenant shall obtain insurance coverage for the Aircraft as Tenant may determine.

vi. Business Interruption. Tenant is solely responsible for all costs of business interruption, however incurred, and Tenant may purchase business interruption insurance as Tenant may determine.

D. Insurance Requirements. The insurance described by this section have the following requirements:

i. General Requirements. At all times when this Agreement is in effect, Tenant shall maintain in force all required insurance coverage and shall have on file with the City Certificates of Insurance evidencing the same. Such certificates shall provide that coverage will not be cancelled, suspended, voided, or reduced without at least thirty (30) days prior written notice to the City. Ratings for the financial strength of the companies providing Tenant's insurance policies shall be disclosed in such certificates and shall be "A- VII" or stronger as published in the latest Best's Key Rating Guide (or a comparable rating from a comparable rating service). If a lower rating is proposed, City may examine the financial strength of the

insurance company proposed to provide coverage and may consent to a lower rating in the City's sole and absolute discretion, and City may also require additional assurances from Tenant. All certificates shall be signed by a person authorized by the insurer and licensed by the State of Utah. All policies (except any policies required for worker's compensation or error s and omissions) and the certificates evidencing coverage shall name City and its officers, employees, and volunteers as additional insureds (or in the case of property coverage, City shall be named as a loss payee). Tenant shall provide for a renewal of all insurance coverage on a timely basis to prevent any lapse in coverage. City retains the right to approve any deductibles, and Tenant shall notify City of any material erosion of the aggregate limits of any policy. Tenant's policies shall be primary. Such policies shall extend insurance to cover Tenant's contractual obligations under this Agreement.

ii. Minimum Requirements. City's insurance requirements are minimum requirements, and Tenant is responsible to obtain adequate insurance coverage as Tenant may determine. Except as otherwise expressly set forth in this Agreement, Tenant assumes all risk under this Agreement (including, but not limited to, business interruption claims) whether or not insured.

iii. Waiver of Subrogation. Notwithstanding any other provision contained in this Agreement, each of the parties hereby waives any rights of subrogation it may have against the other party for loss or damage from any risk that is covered by insurance (including, but not limited to, claims for business interruption). Each of the parties shall obtain a clause or endorsement providing for such waiver of subrogation in any policies of insurance required under this Agreement.

iv. Terms Subject to Change. City, in its sole and absolute discretion, reserves the right to review and adjust at any time Tenant's required insurance limits, types of coverage, and any other terms applicable to insurance to reasonably insure against any risk associated with this Agreement or Tenant's use, occupancy, or operations at the Airport. Among other things, City may review any or all insurance coverage on a periodic basis and in connection with any specific activity or event associated with the Airport or proposed by Tenant.

v. Stopping Operations. Among City's remedies, if at any time Tenant's insurance coverage is not in effect as required herein, City may (but is not required to) stop all or any portion of Tenant's operations without liability to City until Tenant fully restores such coverage.

E. Performance Security. City reserves the right to require a performance security in a form and amount acceptable to City upon any material default by Tenant under this Agreement.

7. Hazardous Materials. Tenant shall not cause or permit any Hazardous Materials to be used, produced, stored, transported, brought upon, or released on , under, or about the premises or the Airport by Tenant or Tenant's Associates in violation of applicable Environmental Laws. Tenant is responsible for any such violation as provided by Section 6.A. of this Agreement. Tenant agrees that in the event of a release or threat of release of any Hazardous Material by Tenant or Tenant's Associates at the Airport, Tenant shall provide City with prompt notice of the same. Tenant shall respond to any such release or threat of release in accordance with applicable Laws and Regulations.

8. Assignment and Subleasing

A. Assignment. Tenant shall not assign any of its rights under this Agreement, including, but not limited to, rights in the Tenant Improvements, (whether such assignment is voluntary or involuntary, by merger, consolidation, dissolution, change in control, or any other manner), shall not encumber any such rights or record this Agreement (or any document or interest related thereto) and shall not delegate any performance under this Agreement, except with prior written consent of City to any of the same. City will not unreasonably withhold written consent to an assignment of this Agreement.

B. Subleasing. With prior written consent of City, Tenant shall have the right to sublease portions of the Premises and Tenant Improvements only for the purposes specified in this Agreement or to store an aircraft. City shall have the right to approve any sublease tenant and sublease agreement. Tenant shall impose on any approved sublease tenant the same terms set forth in this Agreement to provide for the rights and protections afforded to City. Tenant shall reserve the right to amend any sublease to conform to the requirements of this Agreement, and any sublease shall be consistent with and subordinate to this Agreement as it is amended from time to time. Any sublease shall include an agreement that the sublease will attorn to and pay rent to City if Tenant ceases to be a party to this Agreement. Tenant shall provide to City a copy of any sublease executed by Tenant. No sublease shall relieve Tenant of any obligations under this Agreement.

9. Damage, Destruction, and Condemnation.

A. Damage or Destruction of Premises. If any portion of the Premises or the Tenant Improvements is damaged in any manner, Tenant shall promptly remove from the Airport all debris and cause repairs to be made to restore the same to an orderly and safe condition. All work shall be performed in accordance with plans and specifications that are approved by City as being consistent or better that the original improvements, and Tenant shall follow City's policies and procedures regarding obtaining building permits as necessary. Tenant shall apply all proceeds that are made available from Tenant's insurance policies (or those of any subtenant or assignee) to performing such work. If City performs such work pursuant to Section 10.B, such insurance proceeds shall be paid to City. If the Premises or Tenant Improvements are tenantable despite such damage, Tenant shall not receive any abatement of Tenant's rent obligations. To the extent that any portion is rendered untenantable by such damage in light of the purposes of this Agreement (as determined by City in its sole discretion), rent shall continue if Tenant has business interruption insurance, or if Tenant does not have such insurance, City shall abate Tenant's rent proportionately until repairs have been substantially completed (as determined by City in its sole discretion).

B. Condemnation. In the event of any condemnation proceeding in which all or any part of the Premises is taken (by a condemnor other than the City), all compensation from such proceeding shall be paid to City, except that Tenant may pursue a claim against the condemnor for the value of the Tenant Improvements and Tenant's leasehold interest and any subtenants may pursue a claim against the condemnor for the value of their subtenancy interests. In the event of a partial taking, City shall reduce the ground rent payable by Tenant on a pro rata basis for portions of the premises so taken. If City determines in its sole discretion that all or a material portion of the premises will be (or has been) rendered untenantable as a result of such taking, City may terminate this Agreement by giving Tenant a written notice of termination, and this Agreement shall terminate at time specified in the notice (which shall not be less than sixty (60) days after the date of such notice).

10. Default

A. Tenant's Default. Each of the following events shall constitute a default or breach of this Agreement by the Tenant. (i) Tenant fails to timely pay any installment of rent; (ii) Tenant violates any requirement under this Agreement (including, but not limited to, abandonment of the Premises) and fails to cure the same within sixty (60) days after written notice thereof by City to Tenant; (iii) Tenant assigns or encumbers any right in this Agreement, delegates any performance hereunder, or subleases any part of the Premises (except as expressly permitted in this Agreement); (iv) Tenant files a petition in bankruptcy, becomes insolvent, or has a petition filed against Tenant in bankruptcy, insolvency, or for reorganization or appointment of a receiver or trustee which is not dismissed within sixty (60) days; (v) Tenant petitions for or enters into an arrangement for the benefit of creditors, or suffers this Agreement to become subject to a writ of execution and such writ is not released within thirty (30) days; or (vi) Tenant defaults in constructing a Tenant Improvement as provided for in this Agreement.

B. Remedies. Upon default by Tenant under this Agreement, City may (at any time) pursue any or all remedies available to City, including, but not limited to, the following: (i) perform in Tenant's stead any obligation that Tenant has failed to perform, and Tenant shall promptly pay to City all costs incurred by City for such performance; (ii) terminate Tenants rights under this Agreement upon delivering a written notice of termination; and (iii) re-enter and take possession of the Premises by any lawful means (with or without terminating this Agreement). Tenant shall pay all costs and damages arising out of Tenant's default, including, but not limited to, the cost of recovering possession of the Premises, the cost of improving and re-letting the Premises, and any attorney fees and costs. Notwithstanding any termination or re-entry, Tenant shall remain liable to pay the rent required under this Agreement for the remaining term of this Agreement, and Tenant shall pay City on demand for any deficiency in the same. No action by City or City's Associates shall be construed as an election by City to terminate this Agreement or accept any surrender of the Premises unless City provides Tenant with a written notice expressly stating that City has terminated this Agreement or accepted a surrender of the Premises. Following a default by Tenant under this Agreement, City shall exercise commercially reasonable, good faith efforts to mitigate its damages as required by applicable Utah law.

C. Default by City. City shall not be in default under this Agreement unless City fails to perform an obligation required of City under this Agreement within thirty (30) days after written notice by Tenant to City. If the nature of City's obligation is such that more than thirty (30) days are reasonably required for performance or cure, City shall not be in default if City commences performance within such thirty (30) day period and thereafter diligently prosecutes the same to completion. In no event may Tenant terminate this Agreement or withhold the payment of rent or other charges provided for in this Agreement as a result of City's default.

D. Survival. The provisions of this Section 10 and the remedies and rights provided in Section 6 shall survive any expiration or termination of this Agreement.

11. Expiration or Termination

A. Tenant's First Right of Refusal. If the City elects to re-let the Premises upon the expiration of this Agreement, and if the Tenant is in compliance with the terms of this Agreement, the Tenant shall have the first right of refusal to enter into a new lease of the Premises upon the terms and conditions as the City Council at the time may require. No sooner than 180 days and no later than 30 days before the end of the term of this Agreement, Tenant

shall notify City in writing that Tenant desires to exercise its right of first refusal under this paragraph, after which the Tenant's right of first refusal shall expire. Tenant's refusal to enter into a new lease upon the terms and conditions required by the City Council at the time shall also result in the expiration of Tenant's right of first refusal.

B. Disposition of Tenant Improvements. Upon the termination of this Agreement before or on the expiration date, Tenant shall do one of the following at the option of City: (1) enter into a new lease to relet the Premises pursuant to Tenant's right of first refusal as set out in Section 11.A.; (2) surrender the Tenant Improvements to City if City has determined to accept the Tenant Improvements, with Tenant's rights, title, and interests in the Tenants Improvements being deemed transferred to the City upon the City accepting the same; or (3) remove all Tenant Improvements from the Premises and Airport at Tenant's sole expense in a manner acceptable to City (and the obligations of section 6.A. shall apply to such removal). If Tenant fails to remove any Tenant Improvements under subsection (4), City may do so in any manner acceptable to City pursuant to Section 10.B.

C. Surrender of Premises. Unless the Premises is relet to Tenant prior to the expiration of this Agreement pursuant to Section 11.A., upon any expiration or termination of this Agreement, Tenant, at Tenant's sole cost, shall (i) promptly and peaceably surrender to City the Premises (and any Tenant Improvements accepted by the City pursuant to Section 11.B) "broom clean" and in good order and condition, excepting reasonable wear and tear; (ii) repair in a good and workmanlike manner any damage to the Premises or the Airport that arises from or relates to Tenant's use, occupancy, or operations under this Agreement (including, but not limited to, while removing any property upon expiration or termination); (iii) deliver to City all keys and access credentials relating to the Airport; (iv) perform Tenant's environmental obligations as provided in Section 7; and (v) remove all movable personal property and trade fixtures (including signage) that are not owned by City, (except that Tenant must obtain City's prior written consent to remove any such property if Tenant is in default under this Agreement or if such removal may impair the structure of any building). Upon any expiration or termination of this Agreement (which includes, but is not limited to, termination for abandonment of the Premises), all property that Tenant leaves on the Premises shall conclusively be deemed to have been abandoned and may be appropriated, sold, stored, destroyed, or otherwise disposed of by City without notice to, and without any obligation to account to, Tenant or any other person (except that Tenant Improvements shall be as provided in Section 11.B). Tenant shall pay to City all expenses incurred in connection with the disposition of such property in excess of any amount received by City from such disposition. Tenant shall not be released from Tenant's obligations under this Agreement in connection with surrender of the Premises until City has inspected the Premises and delivered to Tenant a written acceptance of such surrender.

D. Holding Over. If Tenant remains in possession of the Premises after any expiration or termination of this Agreement, such occupancy shall not waive any default under this Agreement and City may terminate such occupancy as a tenancy at will in accordance with Utah Law. During such occupancy, Tenant shall comply will all provisions of this Agreement that are applicable to an at-will-tenancy, and Tenant shall pay the following rent: ground rent at the highest rate then charged at the Airport and rent for the Tenant Improvements at fair market value based on City's survey of rent for similarly situated facilities at the Airport and at other western airports.

E. Survival. The provisions of this Section 11 shall survive any expiration or termination of this Agreement.

12. General Provisions

A. No Exclusive Rights. Nothing in this Agreement shall be construed to grant to Tenant any exclusive right or privilege for the conduct of any activity on the Airport (except to lease the Premises for Tenant's exclusive use as provided herein).

B. Agreement Preserves City's Compliance. This Agreement shall be interpreted to preserve City's rights and powers to comply with City's Federal and other governmental obligations.

C. Subordination to City's Government Commitments. This Agreement is subordinate to the provisions of any agreement between City and the United States or other governmental authority (regardless of when made) that affects the Airport, including, but not limited to, agreements governing the expenditure of Federal funds for Airport Improvements. In the event that the Federal Aviation Administration or other governmental authority requires any modification to this Agreement as a condition of City entering any agreement or participating in any program applicable to the Airport, Tenant agrees to consent to any such modification. If a governmental authority determines that any act or omission of Tenant or Tenant's Associates has caused or will cause City to be non-compliant with any of City's government commitments, Tenant shall immediately take such actions that may be necessary to preserve City's compliance with the same.

D. Subordination to Financing and Matters of Record. This Agreement is subordinate to the provisions of any agreements or indentures entered by City (regardless of when entered) in connection with any debt financing applicable to the Airport and is subordinate to any matter of record affecting the real property of the Airport.

E. Force Majeure. No act or event, whether foreseen or unforeseen, shall operate to excuse Tenant from the prompt payment of rent or any other amounts required to be paid under this Agreement. If City (or Tenant in connection with obligations other than payment obligations) is delayed or hindered in any performance under this Agreement by a force majeure event, such performance shall be excused to the extent so delayed or hindered during the time when such force majeure event is in effect, and such performance shall promptly occur or resume thereafter at the expense of the party so delayed or hindered. A "force majeure event" is an act or event, whether foreseen or unforeseen, that prevents a party in whole or in part from performing as provided in this Agreement, that is beyond the reasonable control of and not the fault of such party, and such party has been unable to avoid or overcome by exercising due diligence, and may include, but is not limited to, acts of nature, war, riots, strikes, accidents, fire, and changes in law.

F. Rights and Remedies. Except as expressly set forth in this Agreement, the rights and remedies set forth in this Agreement are not intended to be exhaustive and the exercise by either party of any right or remedy does not preclude the exercise of any other rights or remedies that may now or subsequently exist.

G. Attorneys Fees. If any action is brought to recover any rent or other amount under this Agreement because of any default under this Agreement, to enforce or interpret any of the provisions of this Agreement, or for the recovery of possession of the Premises, the party prevailing in such action shall be entitled to recovery from the other party(s) reasonable attorneys fees, court costs, the fees of experts and other professionals, and other costs arising from such action (including those arising from any appeal), the amount of which shall be fixed

by the court and made a part of any judgment rendered. Tenant shall be responsible for all expenses, including but not limited to, attorney fees incurred by the City in any case or proceeding involving the Tenant or any permitted assignee of Tenant under or related to any bankruptcy or insolvency law. The provisions of this Section 12.G. shall survive any expiration or termination of this Agreement.

H. Governing Law, Venue, and Waiver of Jury Trial. This Agreement and the respective rights and obligations of the parties shall be governed by, interpreted, and enforced in accordance with the Laws of the State of Utah. Venue for any action arising out of or related to this Agreement or actions contemplated hereby may be brought in the United States District Court for Utah or the District Court for the State of Utah sitting in Washington County, Utah so long as one of such courts shall have subject matter jurisdiction over such action or proceeding, and each of the parties hereby irrevocable consents to the jurisdiction of the same and of the appropriate appellate courts there from. Process in any such action may be served on any party anywhere in the world. CITY AND TENANT EACH KNOWINGLY, VOLUNTARILY, AND INTENTIONALLY WAIVES ITS RIGHT TO TRIAL BY JURY IN ANY ACTION, PROCEEDING, OR COUNTERCLAIM BROUGHT BY EITHER OF THEM AGAINST THE OTHER FOR ALL MATTERS ARISING OUT OF OR RELATING TO THIS LEASE OR ANY USE, OCCUPANCY, OR OPERATIONS AT THE PREMISES OR THE AIRPORT. The provisions of this Section 12.H. shall survive any expiration or termination of this Agreement.

I. Amendments and Waivers. No amendment to this Agreement shall be binding on City or Tenant unless reduced to writing and signed by both parties. No provision of this Agreement may be waived, except pursuant to a writing executed by the party against whom the waiver is sought to be enforced.

J. Severability. If any provision of this Agreement is determined to be invalid, illegal, or unenforceable, the remaining provisions of this Agreement shall remain in full force and effect if both the economic and legal substance of the transactions that this Agreement contemplates are not affected in any manner materially adverse to any part. If any provision of this Agreement is held invalid, illegal, or unenforceable, the parties shall negotiate in good faith to modify this Agreement to fulfill as closely as possible the original intents and purposes of this Agreement.

K. Merger. This Agreement constitutes the final, complete, and exclusive agreement between the parties on the matters contained in this Agreement. All prior and contemporaneous negotiations and agreements between the parties on the matters contained in this Agreement are expressly merged into and superseded by this Agreement. In entering into this Agreement, neither party has relied on any statement, representation, warranty, now agreement of the other party except for those expressly contained in this Agreement. Any proposal materials or exhibits submitted by Tenant in response to a solicitation by City, to the extent accepted by City, shall also be incorporated in this Agreement.

L. Confidentiality. Tenant acknowledges that City is subject to legal requirements regarding the public disclosure of records. Tenant shall comply with such laws in connection with making any request that City maintain a record confidentially, and if Tenant complies with the same, Tenant shall have the right to defend any such request for confidentiality at Tenant's expense.

M. Relationship of Parties. This Agreement does not create any partnership, joint venture, employment, or agency relationship between the parties. Nothing in this Agreement shall confer upon any other person or entity any right, benefit, or remedy of any nature.

N. Further Assurances. Each party shall execute any document or take any action that may be necessary or desirable to consummate and make effective a performance that is required under this Agreement.

O. Miscellaneous. The headings in this Agreement are provided for convenience only and do not affect this Agreement's construction or interpretation. All references to Sections are to Sections in this Agreement. Each provision to be performed by Tenant shall be construed as both a covenant and a condition. This Agreement shall be construed without regard to any presumption or rule requiring construction or interpretation against the drafting party. If Tenant consists of more than one individual or entity, the obligations of all such individuals and entities shall be joint and several. References in this Agreement to any period of days shall mean calendar days unless specifically stated otherwise.

P. Time is of the Essence. Time is of the essence in this Agreement.

Q. Notices. Any notice, demand, written consent, or other communication required to be in writing under this Agreement shall be given in writing by personal delivery, express mail (postage prepaid), nationally recognized overnight courier with all fees prepaid (such as, by way of example, Federal Express or UPS), or certified mail (return receipt requested and postage prepaid) when addressed to the respective parties as follows.

If to City:	If to Tenant:
Hurricane City City Attorney 147 N. 870 W. Hurricane, UT 84737	Sunnie, LLC Scott Stratton 365 West Center St. La Verkin, UT 84745

Either City or Tenant may change its notice address by giving written notice (as provided herein) of such change to the other party. Any notice, demand, or written consent or communication shall be deemed to have been given, and shall be effective, upon compliance with this Section 12.Q. and delivery to the notice address then in effect for the party to which the notice is directed; provided, however, that such delivery shall not be defeated or delayed by any refusal to accept delivery or an inability to effect delivery because of an address change that was not properly communicated.

R. Binding Obligation. Tenant warrants and represents that it has the right, power, and legal capacity to enter into and perform its obligations under this Agreement as a legal, valid, and binding obligation of Tenant.

S. City Approval and Consent. Wherever in this Agreement it specifies the City must give approval or consent by the terms of this Agreement, such approval or consent shall not be unreasonably withheld. Unless otherwise specified, approval, consent, or action by the City refers to approval or consent by the Hurricane City Council.

T. Personal Guaranty. The undersigned Guarantor does herewith personally guarantee the due performance of this Agreement regarding all its provisions and obligations in the same way as if Guarantor were the original Tenant of this Agreement. This guaranty is continuing and unconditional. The undersigned Guarantor shall be liable as a principal debtor and not merely as surety, and the bankruptcy or any assignment in favor of creditors of Tenant

shall not affect the enforceability of this Personal Guaranty. This Personal Guaranty shall bind the respective heirs, executors, administrators, and assigns of the undersigned Guarantor, and shall inure to the benefit of the City, its successors, assigns, and subrogees. Guarantor now waives and releases all benefits and relief from all and any appraisement, exemption, or stay laws of any state currently in force or passed in the future.

IN WITNESS WHEREOF, the parties hereto have executed this Agreement as of the date first written above.

HURRICANE CITY

_____
Nanette Billings, Mayor

Attest:

_____
City Recorder

Approved as to form:

_____
Dayton Hall, City Attorney

SUNNIE, LLC

_____
By: Scott Stratton
Its: Manager

GUARANTOR

_____
Printed Name: Scott Stratton

HURRICANE CITY
UTAH

STAFF COMMENTS

Consideration and possible approval of an **FAA grant application for AWOS** at the City Airport. -Mike Vercimak/Dave Houston

Discussion:
This agenda item is to consider authorizing the City to apply for federal assistance to fund the engineering and installation of an Automated Weather Observing System (AWOS) at the City Airport. The AWOS has been on the Airport's Capital Improvement Plan for some time. The facility would be installed between the existing runway and 1100 West, with the monitoring system installed in the City's hangar. It is estimated that federal funding would contribute $346,206, state funding would contribute $17,897, and City funding would contribute $17,897, for a total estimated cost of $382,000. The Airport Board has recommended that the City Council proceed with the AWOS funding and installation.
The complete 68-page grant application is included in the packet.
The grant application requires certain assurances from the City, including the following:

- The City has sufficient funds available for the portion of the project not paid by the United States.
- The City will operate the AWOS in a safe and serviceable condition.
- The City is capable of commencing work on the AWOS within six months after the grant is made.

If the Council chooses to proceed, the application requires a motion by the Council authorizing the filing of the grant application, including all understandings and assurances contained in the application, and directing Mayor Billings and Mike Vercimak to proceed with the application, including providing such additional material as may be required by the FAA. -Dayton Hall

Findings:

Recommendation:

Attachments:
1. 1L8 AIP-012 FAA Grant Application_completed

OMB Number: 4040-0004
Expiration Date: 11/30/2025

Application for Federal Assistance SF-424

*1. Type of Submission:
- ☐ Preapplication
- ☒ Application
- ☐ Changed/Corrected Application

*2. Type of Application
- ☒ New
- ☐ Continuation
- ☐ Revision

* If Revision, select appropriate letter(s):

* Other (Specify)

*3. Date Received:

4. Applicant Identifier:
1L8 - Hurricane Municipal Airport

5a. Federal Entity Identifier:

*5b. Federal Award Identifier:
AIP No. 3-49-0012-012-2024

State Use Only:

6. Date Received by State:

7. State Application Identifier:

8. APPLICANT INFORMATION:

*a. Legal Name: Hurricane City

*b. Employer/Taxpayer Identification Number (EIN/TIN):
87-6112106

*c. UEI:
PNS1SKQDNZ58

d. Address:

*Street 1: 147 North 870 West
Street 2:
*City: Hurricane
County/Parish: Washington
*State: UT
*Province:
*Country: USA: United States
*Zip / Postal Code 84737-1671

e. Organizational Unit:

Department Name:
Hurricane Municipal Airport

Division Name:
Hurricane Municipal Airport

f. Name and contact information of person to be contacted on matters involving this application:

Prefix: Mr. *First Name: Mike
Middle Name:
*Last Name: Vercimack
Suffix:

Title: Public Works Director

Organizational Affiliation:
Public Works

*Telephone Number: (435) 635-2811 Fax Number: (435) 635-4284

*Email: mike@cityofhurricane.com

Application for Federal Assistance SF-424

***9. Type of Applicant 1: Select Applicant Type:**

C: City or Township Government

Type of Applicant 2: Select Applicant Type:

Pick an applicant type

Type of Applicant 3: Select Applicant Type:

Pick an applicant type

*Other (Specify)

***10. Name of Federal Agency:**

Federal Aviation Administration - Denver ADO

11. Catalog of Federal Domestic Assistance Number:

20.106

CFDA Title:

Airport Improvement Program

***12. Funding Opportunity Number**:

Not Applicable

*Title:

N/A

13. Competition Identification Number:

Not Applicable

Title:

N/A

14. Areas Affected by Project (Cities, Counties, States, etc.):

Hurricane City, Washington County, Utah

***15. Descriptive Title of Applicant's Project**:

Install Weather Reporting Equipment (AWOS-III P/T)

Attach supporting documents as specified in agency instructions.

Application for Federal Assistance SF-424

16. Congressional Districts Of:

*a. Applicant: UT-002 *b. Program/Project: UT-002

Attach an additional list of Program/Project Congressional Districts if needed.

17. Proposed Project:

*a. Start Date: 01/01/2023 *b. End Date: 02/28/2025

18. Estimated Funding ($):

*a. Federal	$ 346,206
*b. Applicant	$ 17,897
*c. State	$ 17,897
*d. Local	$ 0
*e. Other	$ 0
*f. Program Income	$ 0
*g. TOTAL	$ 382,000

***19. Is Application Subject to Review By State Under Executive Order 12372 Process?**

☐ a. This application was made available to the State under the Executive Order 12372 Process for review on _____ .

☒ b. Program is subject to E.O. 12372 but has not been selected by the State for review.

☐ c. Program is not covered by E.O. 12372.

***20. Is the Applicant Delinquent On Any Federal Debt?**

☐ Yes ☒ No

If "Yes", explain:

21. *By signing this application, I certify (1) to the statements contained in the list of certifications** and (2) that the statements herein are true, complete and accurate to the best of my knowledge. I also provide the required assurances** and agree to comply with any resulting terms if I accept an award. I am aware that any false, fictitious, or fraudulent statements or claims may subject me to criminal, civil, or administrative penalties. (U. S. Code, Title 218, Section 1001)

☒ ** I AGREE

** The list of certifications and assurances, or an internet site where you may obtain this list, is contained in the announcement or agency specific instructions.

Authorized Representative:

Prefix: Mrs. *First Name: Nanette

Middle Name:

*Last Name: Billings

Suffix:

*Title: Mayor

*Telephone Number: (435) 635-2811 Fax Number: (435) 635-4284

* Email: billings@cityofhurricane.com

*Signature of Authorized Representative: *Date Signed:

Application for Federal Assistance (Development and Equipment Projects)

PART II – PROJECT APPROVAL INFORMATION

Part II - SECTION A

The term "Sponsor" refers to the applicant name provided in box 8 of the associated SF-424 form.

Item 1.
Does Sponsor maintain an active registration in the System for Award Management (www.SAM.gov)?

☒ Yes ☐ No

Item 2.
Can Sponsor commence the work identified in the application in the fiscal year the grant is made or within six months after the grant is made, whichever is later?

☒ Yes ☐ No ☐ N/A

Item 3.
Are there any foreseeable events that would delay completion of the project? If yes, provide attachment to this form that lists the events.

☐ Yes ☒ No ☐ N/A

Item 4.
Will the project(s) covered by this request have impacts or effects on the environment that require mitigating measures? If yes, attach a summary listing of mitigating measures to this application and identify the name and date of the environmental document(s).

☐ Yes ☒ No ☐ N/A

Item 5.
Is the project covered by this request included in an approved Passenger Facility Charge (PFC) application or other Federal assistance program? If yes, please identify other funding sources by checking all applicable boxes.

☐ Yes ☒ No ☐ N/A

☐ The project is included in an *approved* PFC application.

If included in an approved PFC application,
does the application *only* address AIP matching share? ☐ Yes ☐ No

☐ The project is included in another Federal Assistance program. Its CFDA number is below.

Item 6.
Will the requested Federal assistance include Sponsor indirect costs as described in 2 CFR Appendix VII to Part 200, States and Local Government and Indian Tribe Indirect Cost Proposals?

☐ Yes ☒ No ☐ N/A

If the request for Federal assistance includes a claim for allowable indirect costs, select the applicable indirect cost rate the Sponsor proposes to apply:

☐ De Minimis rate of 10% as permitted by 2 CFR § 200.414.

☐ Negotiated Rate equal to % as approved by (the Cognizant Agency) on (Date) (2 CFR part 200, appendix VII).

Note: Refer to the instructions for limitations of application associated with claiming Sponsor indirect costs.

PART II - SECTION B

Certification Regarding Lobbying

The declarations made on this page are under the signature of the authorized representative as identified in box 21 of form SF-424, to which this form is attached. The term “Sponsor” refers to the applicant name provided in box 8 of the associated SF-424 form.

The Authorized Representative certifies, to the best of his or her knowledge and belief, that:

(1) No Federal appropriated funds have been paid or will be paid, by or on behalf of the Sponsor, to any person for influencing or attempting to influence an officer or employee of an agency, a Member of Congress, an officer or employee of Congress, or an employee of a Member of Congress in connection with the awarding of any Federal contract, the making of any Federal grant, the making of any Federal loan, the entering into of any cooperative agreement, and the extension, continuation, renewal, amendment, or modification of any Federal contract, grant, loan, or cooperative agreement.

(2) If any funds other than Federal appropriated funds have been paid or will be paid to any person for influencing or attempting to influence an officer or employee of any agency, a Member of Congress, an officer or employee of Congress, or an employee of a Member of Congress in connection with this Federal contract, grant, loan, or cooperative agreement, the Authorized Representative shall complete and submit Standard Form-LLL, ‘‘Disclosure Form to Report Lobbying,’’ in accordance with its instructions.

(3) The Authorized Representative shall require that the language of this certification be included in the award documents for all sub-awards at all tiers (including subcontracts, subgrants, and contracts under grants, loans, and cooperative agreements) and that all subrecipients shall certify and disclose accordingly.

This certification is a material representation of fact upon which reliance was placed when this transaction was made or entered into. Submission of this certification is a prerequisite for making or entering into this transaction imposed by section 1352, title 31, U.S. Code. Any person who fails to file the required certification shall be subject to a civil penalty of not less than $10,000 and not more than $100,000 for each such failure.

PART II – SECTION C

The Sponsor hereby represents and certifies as follows:

1. Compatible Land Use – The Sponsor has taken the following actions to assure compatible usage of land adjacent to or in the vicinity of the airport:

Appropriate action has been taken to restrict the use of land to uses that are compatible with normal airport operations.

2. Defaults – The Sponsor is not in default on any obligation to the United States or any agency of the United States Government relative to the development, operation, or maintenance of any airport, except as stated herewith:

The City is not in default on any obligation to the United States government.

3. Possible Disabilities – There are no facts or circumstances (including the existence of effective or proposed leases, use agreements or other legal instruments affecting use of the Airport or the existence of pending litigation or other legal proceedings) which in reasonable probability might make it impossible for the Sponsor to carry out and complete the Project or carry out the provisions of the Grant Assurances, either by limiting its legal or financial ability or otherwise, except as follows:

No facts or circumstances exist that might make it impossible for the Sponsor to complete the project.

4. Consistency with Local Plans – The project is reasonably consistent with plans existing at the time of submission of this application) of public agencies that are authorized by the State in which the project is located to plan for the development of the area surrounding the airport.

The project is consistent with plans of local public agencies.

5. Consideration of Local Interest – It has given fair consideration to the interest of communities in or near where the project may be located.

The project has given fair consideration to the interest of communities in or near where the project will be located.

6. Consultation with Users – In making a decision to undertake an airport development project under Title 49, United States Code, it has consulted with airport users that will potentially be affected by the project (§ 47105(a)(2)).

Consultation has occurred with airport users and affected parties using the airport which project is proposed.

7. Public Hearings – In projects involving the location of an airport, an airport runway or a major runway extension, it has afforded the opportunity for public hearings for the purpose of considering the economic, social, and environmental effects of the airport or runway location and its consistency with goals and objectives of such planning as has been carried out by the community and it shall, when requested by the Secretary, submit a copy of the transcript of such hearings to the Secretary. Further, for such projects, it has on its management board either voting representation from the communities where the project is located or has advised the communities that they have the right to petition the Secretary concerning a proposed project.

Item 7 is Not Applicable. Project does not require an opportunity for a public hearing.

8. Air and Water Quality Standards – In projects involving airport location, a major runway extension, or runway location it will provide for the Governor of the state in which the project is located to certify in writing to the Secretary that the project will be located, designed, constructed, and operated so as to comply with applicable and air and water quality standards. In any case where such standards have not been approved and where applicable air and water quality standards have been promulgated by the Administrator of the Environmental Protection Agency, certification shall be obtained from such Administrator. Notice of certification or refusal to certify shall be provided within sixty days after the project application has been received by the Secretary.

Item 8 is Not Applicable.

PART II – SECTION C (Continued)

9. **Exclusive Rights** – There is no grant of an exclusive right for the conduct of any aeronautical activity at any airport owned or controlled by the Sponsor except as follows:

There are no exclusive rights for any aeronautical activity at any airport owned or controlled by the Sponsor.

10. **Land** – (a) The sponsor holds the following property interest in the following areas of land, which are to be developed or used as part of or in connection with the Airport subject to the following exceptions, encumbrances, and adverse interests, all of which areas are identified on the aforementioned property map designated as Exhibit “A”. [1]

The Sponsor owns all of the property associated with this project. Exhibit "A" has been previously submitted and is on file at the Federal Aviation Administration, Denver ADO.

The Sponsor further certifies that the above is based on a title examination by a qualified attorney or title company and that such attorney or title company has determined that the Sponsor holds the above property interests.

(b) The Sponsor will acquire within a reasonable time, but in any event prior to the start of any construction work under the Project, the following property interest in the following areas of land on which such construction work is to be performed, all of which areas are identified on the aforementioned property map designated as Exhibit “A”. [1]

Item 10b is Not Applicable to this project.

(c) The Sponsor will acquire within a reasonable time, and if feasible prior to the completion of all construction work under the Project, the following property interest in the following areas of land which are to be developed or used as part of or in connection with the Airport as it will be upon completion of the Project, all of which areas are identified on the aforementioned property map designated as Exhibit “A”. [1]

Item 10c is Not Applicable to this project.

[1] State the character of property interest in each area and list and identify for each all exceptions, encumbrances, and adverse interests of every kind and nature, including liens, easements, leases, etc. The separate areas of land need only be identified here by the area numbers shown on the property map.

PART III – BUDGET INFORMATION – CONSTRUCTION

SECTION A – GENERAL	
1. Assistance Listing Number:	20.106
2. Functional or Other Breakout:	Airport Improvement Program

SECTION B – CALCULATION OF FEDERAL GRANT			
Cost Classification	**Latest Approved Amount (Use only for revisions)**	**Adjustment + or (-) Amount (Use only for revisions)**	**Total Amount Required**
1. Administration expense			$ 5,000
2. Preliminary expense			0
3. Land, structures, right-of-way			0
4. Architectural engineering basic fees			40,500
5. Other Architectural engineering fees			0
6. Project inspection fees			54,500
7. Land development			0
8. Relocation Expenses			0
9. Relocation payments to Individuals and Businesses			0
10. Demolition and removal			0
11. Construction and project improvement			282,000
12. Equipment			0
13. Miscellaneous			0
14. **Subtotal** (Lines 1 through 13)			$ 382,000
15. Estimated Income (if applicable)			0
16. Net Project Amount (Line 14 minus 15)			382,000
17. **Less**: Ineligible Exclusions (Section C, line 23 g.)			0
18. **Subtotal** (Lines 16 through 17)			$ 382,000
19. Federal Share requested of Line 18			346,206
20. Grantee share			17,897
21. Other shares			17,897
22. **TOTAL PROJECT** (Lines 19, 20 & 21)			$ 382,000

SECTION C – EXCLUSIONS

23. Classification (Description of non-participating work)	Amount Ineligible for Participation
a.	
b.	
c.	
d.	
e.	
f.	
g. Total	

SECTION D – PROPOSED METHOD OF FINANCING NON-FEDERAL SHARE

24. Grantee Share – Fund Categories	Amount
a. Securities	
b. Mortgages	
c. Appropriations (by Applicant)	17,897
d. Bonds	
e. Tax Levies	
f. Non-Cash	
g. Other (Explain):	
h. **TOTAL** - Grantee share	$ 17,897
25. Other Shares	**Amount**
a. State	17,897
b. Other	
c. **TOTAL** - Other Shares	$ 17,897
26. TOTAL NON-FEDERAL FINANCING	$ 35,794

SECTION E – REMARKS

(Attach sheets if additional space is required)

1. Standard DOT Title VI Assurances
2. Certification for Contracts, Grants, Loans, and Cooperative Agreements
3. Sponsor Certifications
4. Current FAA Advisory Circulars
5. Airport Sponsor Assurances
6. Exhibit "A" Property Map

The following item(s) are incorporated by reference:
1. Plans and Specifications

PART IV – PROGRAM NARRATIVE

(Suggested Format)

PROJECT: Install Weather Reporting Equipment (AWOS-III P/T)

AIRPORT: Hurricane Municipal Airport (1L8)

1. Objective:

The objective of this project is to equip 1L8 with weather reporting equipment, addressing the absence of current local weather information. The installation of AWOS-III P/T equipment is intended to furnish pilots with certified, up-to-date weather conditions. This includes the placement of the AWOS west of RW 1/19, 510 feet from the centerline as depicted in the project exhibit. The project encompasses tasks such as installing the equipment foundation, setting up power/communications service, installing the AWOS equipment, and completing FAA commissioning.

2. Benefits Anticipated:

This project will bring benefits to both pilots and southwest Utah. The AWOS will supply pilots with certified weather conditions, furnishing the essential weather data required for departure and arrival preparations at 1L8, thereby enhancing flight safety. Additionally, the AWOS weather data will play a crucial role in addressing regional emergency aircraft access to 1L8 (ie., medical, firefighting, and search/rescue).

3. Approach: (See approved Scope of Work in Final Application)

The AWOS installation project follows a conventional design, bid, and construct/equipment installation process. Woolpert is acting as Hurricane City's consultant, leading and supporting this initiative. Design and bid package preparation will be finished and ready for advertisement in March 2024. Following the public advertisement process, bids will be opened in April 2024. After the bid opening and bid review/analysis, a recommendation of award will be submitted to the FAA for concurrence. Upon FAA acceptance and FY2024 AIP funding availability, the contract will be awarded to the lowest-qualified bidder. A summer 2024 construction start date is expected with completion in fall 2024, contingent on equipment availability and delivery. Post-project acceptance and satisfactory FAA AWOS certification, final administrative documentation will be prepared and submitted to the FAA for review, acceptance, and project closure.

4. Geographic Location:

Hurricane City and Washington County; specifically the Hurricane Municipal Airport (General Dick Stout Field). The geographical reference point for the airport is N 37d 08m 41s, W 113d 18m 36s.

5. If Applicable, Provide Additional Information:

Not Applicable.

6. Sponsor's Representative: (include address & telephone number)

Mr. Mike Vercimack, Public Works Director, 147 North 870 West, Hurricane, UT 84737
Phone: (435) 635-2811, Ext. 119
E-mail: mike@cityofhurricane.com

CERTIFICATION REGARDING LOBBYING

Certification for Contracts, Grants, Loans, and Cooperative Agreements

The undersigned certifies, to the best of his or her knowledge and belief, that:

(1) No Federal appropriated funds have been paid or will be paid, by or on behalf of the undersigned, to any person for influencing or attempting to influence an officer or employee of an agency, a Member of Congress, an officer or employee of Congress, or an employee of a Member of Congress in connection with the awarding of any Federal contract, the making of any Federal grant, the making of any Federal loan, the entering into of any cooperative agreement, and the extension, continuation, renewal, amendment, or modification of any Federal contract, grant, loan, or cooperative agreement.

(2) If any funds other than Federal appropriated funds have been paid or will be paid to any person for influencing or attempting to influence an officer or employee of any agency, a Member of Congress, an officer or employee of Congress, or an employee of a Member of Congress in connection with this Federal contract, grant, loan, or cooperative agreement, the undersigned shall complete and submit Standard Form-LLL, "Disclosure of Lobbying Activities," in accordance with its instructions.

(3) The undersigned shall require that the language of this certification be included in the award documents for all subawards at all tiers (including subcontracts, subgrants, and contracts under grants, loans, and cooperative agreements) and that all subrecipients shall certify and disclose accordingly. This certification is a material representation of fact upon which reliance was placed when this transaction was made or entered into. Submission of this certification is a prerequisite for making or entering into this transaction imposed by section 1352, title 31, U.S. Code. Any person who fails to file the required certification shall be subject to a civil penalty of not less than $10,000 and not more than $100,000 for each such failure.

Statement for Loan Guarantees and Loan Insurance

The undersigned states, to the best of his or her knowledge and belief, that:

If any funds have been paid or will be paid to any person for influencing or attempting to influence an officer or employee of any agency, a Member of Congress, an officer or employee of Congress, or an employee of a Member of Congress in connection with this commitment providing for the United States to insure or guarantee a loan, the undersigned shall complete and submit Standard Form-LLL, "Disclosure of Lobbying Activities," in accordance with its instructions. Submission of this statement is a prerequisite for making or entering into this transaction imposed by section 1352, title 31, U.S. Code. Any person who fails to file the required statement shall be subject to a civil penalty of not less than $10,000 and not more than $100,000 for each such failure.

* APPLICANT'S ORGANIZATION

Hurricane Municipal Airport (1L8)

* PRINTED NAME AND TITLE OF AUTHORIZED REPRESENTATIVE

Prefix: Mrs. * First Name: Nanette Middle Name:

* Last Name: Billings Suffix:

* Title: Mayor

* SIGNATURE: * DATE:

Hurricane City Municipal Airport (1L8)
Cost Estimate
February 2024

Install Weather Reporting Equipment (AWOS III P/T)					
ITEM	**ITEM DESCRIPTION**	**UNIT**	**QTY**	**UNIT PRICE**	**TOTAL**
C-105	Mobilization (10%)	LS	1	$ 26,000.00	$ 26,000.00
L-126	Install AWOS Type III - P/T	LS	1	$ 256,000.00	$ 256,000.00
				Equipment Installation	**$ 282,000.00**
				Consultant Services	**$ 95,000.00**
				Administration	**$ 5,000.00**
				Total Project Cost	**$ 382,000.00**

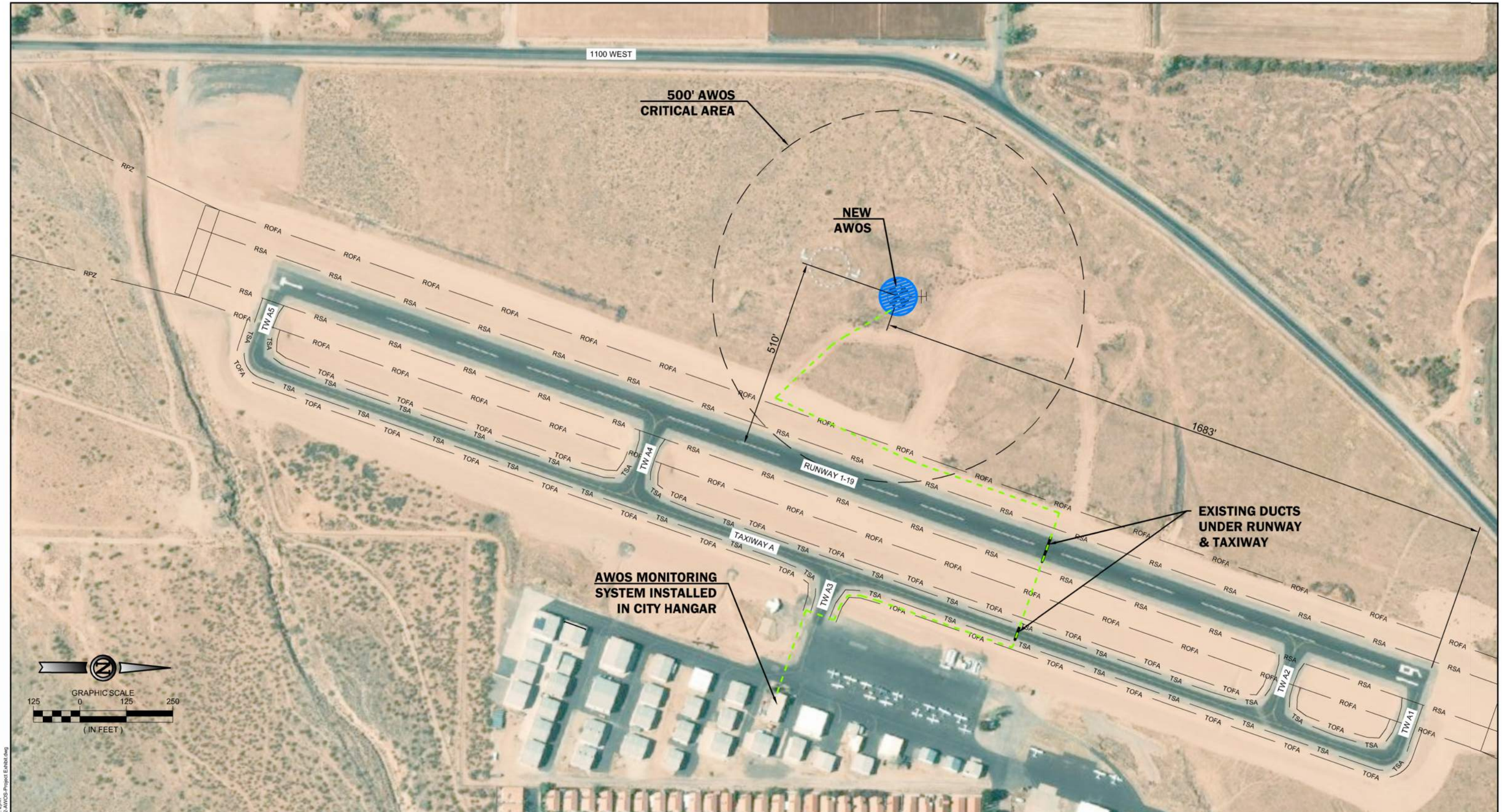

PROJECT LEGEND

WORK AREA LIMITS FOR INSTALL AWOS

POWER TO AWOS

WOOLPERT

35 S 400 West • Suite 200 • St. George, Utah 84770
Phone: 435.673.4677 • Fax: 435.673.8484
• woolpert.com •

HURRICANE CITY MUNICIPAL AIRPORT
AIP 3-49-0012-012-2024
INSTALL AWOS
PROJECT EXHIBIT

DATE: FEBRUARY 2024

Plotted February 9, 2024 @ 10:11 AM by Bateman, Lynn
L:\1L8\1L8 AIP-012 AWOS\CAD\EXHIBITS\1L8-012-AWOS-Project Exhibit.dwg

STANDARD DOT TITLE VI ASSURANCES

Hurricane City (hereinafter referred to as the Sponsor) hereby agrees that as a condition to receiving Federal financial assistance from the Department of Transportation (DOT), it will comply with Title VI of the Civil Rights Act of 1964 (42 U.S.C. 2000d et seq.) and all requirements imposed by 49 CFR Part 21, Nondiscrimination in Federally Assisted Programs of the Department of Transportation -- Effectuation of Title VI of the Civil Rights Act of 1964 (hereinafter referred to as the "Regulations") to the end that no person in the United States shall, on the ground of race, color, or national origin, be excluded from participation in, be denied the benefits of, or be otherwise subjected to discrimination under any program or activity for which the applicant receives Federal financial assistance and will immediately take any measures necessary to effectuate this agreement. Without limiting the above general assurance, the Sponsor agrees concerning this grant that:

1. Each "program" and "facility" (as defined in Section 21.23(a) and 21.23(b)) will be conducted or operated in compliance with all requirements of the Regulations.

2. It will insert the clauses of Attachment 1 of this assurance in every contract subject to the Act and the Regulations.

3. Where Federal financial assistance is received to construct a facility, or part of a facility, the assurance shall extend to the entire facility and facilities operated in connection therewith.

4. Where Federal financial assistance is in the form or for the acquisition of real property or an interest in real property, the assurance shall extend to rights to space on, over, or under such property.

5. It will include the appropriate clauses set forth in Attachment 2 of this assurance, as a covenant running with the land, in any future deeds, leases, permits, licenses, and similar agreements entered into by the Sponsor with other parties:

(a) for the subsequent transfer of real property acquired or improved with Federal financial assistance under this project; and

(b) for the construction or use of or access to space on, over, or under real property acquired or improved with Federal financial assistance under this Project.

6. This assurance obligates the Sponsor for the period during which Federal financial assistance is extended to the program, except where the Federal financial assistance is to provide, or is in the form of personal property or real property or interest therein or structures or improvements thereon, in which case the assurance obligates the Sponsor or any transferee for the longer of the following periods:

(a) the period during which the property is used for a purpose for which Federal financial assistance is extended, or for another purpose involving the provision of similar services or benefits; or
(b) the period during which the Sponsor retains ownership or possession of the property.

7. It will provide for such methods of administration for the program as are found by the Secretary of transportation of the official to whom he delegates specific authority to give reasonable guarantees that it, other sponsors, subgrantees, contractors, subcontractors, transferees, successors in interest, and other participants of Federal financial assistance under such program will comply with all requirements imposed or pursuant to the act, the Regulations, and this assurance.

8. It agrees that the United States has a right to seek judicial enforcement with regard to any matter arising under the Act, the Regulations, and this assurance.

THIS ASSURANCE is given in consideration of and for the purpose of obtaining Federal financial assistance for this Project and is binding on its contractors, the Sponsor, subcontractors, transferees, successors in interest and other participants in the Project. The person or persons whose signatures appear below are authorized to sign this assurance on behalf of the Sponsor.

DATED _____

Hurricane City
(Sponsor)

_____
Nanette Billings, Mayor

CONTRACTOR CONTRACTUAL REQUIREMENTS

ATTACHMENT 1

During the performance of this contract, the contractor, for itself, its assignees and successors in interest (hereinafter referred to as the "contractor") agrees as follows:

1. Compliance with Regulations. The contractor shall comply with the regulations relative to nondiscrimination in federally assisted programs of the Department of Transportation (hereinafter, "DOT") Title 49, Code of Federal Regulations, Part 21, as they may be amended from time to time (hereinafter referred to as the Regulations), which are herein incorporated by reference and made a part of this contract.

2. Nondiscrimination. The contractor, with regard to the work performed by it during the contract, shall not discriminate on the grounds of race, color, or national origin in the selection and retention of subcontractors, including procurements of materials and leases of equipment. the contractor shall not participate either directly or indirectly in the discrimination prohibited by section 21.5 of the Regulations, including employment practices when the contract covers a program set forth in Appendix B of the Regulations.

3. Solicitations for Subcontracts, Including Procurements of Materials and Equipment. In all solicitations either by competitive bidding or negotiation made by the contractor for work to be performed under a subcontract, including procurements of materials or lease of equipment, each potential subcontractor or supplier shall be notified by the contractor of the contractor's obligations under this contract and the Regulations relative to nondiscrimination on the grounds of race, color, or national origin.

4. Information and Reports. The contractor shall provide all information and reports required by the Regulations or directives issued pursuant thereto and shall permit access to its books, records, accounts, other sources of information, and its facilities as may be determined by the Sponsor or the Federal Aviation Administration (FAA) to be pertinent to ascertain compliance with such Regulations, orders, and instructions. Where any information required of a contract is in the exclusive possession of another who fails or refuses to furnish this information, the contractor shall so certify to the sponsor or the FAA, as appropriate, and shall set forth what efforts it has made to obtain the information.

5. Sanctions for Noncompliance. In the event of the contractor's noncompliance with the nondiscrimination provisions of this contract, the sponsor shall impose such contract sanctions as it or the FAA may determine to be appropriate, including, but not limited to:

   a. Withholding of payments to the contractor under the contract until the contractor complies, and/or

   b. Cancellation, termination, or suspension of the contract, in whole or in part.

6. Incorporation of Provisions. The contractor shall include the provisions of paragraphs 1 through 5 in every subcontract, including procurements of materials and leases of equipment, unless exempt by the Regulations or directives issued pursuant thereto. The contractor shall take such action with respect to any subcontract or procurement as the sponsor or the FAA may direct as a means of enforcing such provisions including sanctions for noncompliance. Provided, however, that in the event a contractor becomes involved in, or is threatened with, litigation with a subcontractor or supplier as a result of such direction, the contractor may request the Sponsor to enter into such litigation to protect the interests of the sponsor and, in addition, the contractor may request the United States to enter into such litigation to protect the interest of the United States.

CLAUSES FOR DEEDS, LICENSES, LEASES, PERMITS OR SIMILAR INSTRUMENTS

ATTACHMENT 2

The following clauses shall be included in deeds, licenses, leases, permits, or similar instruments entered into by the Sponsor pursuant to the provisions of Assurances 5(a) and 5(b).

1. The (grantee, licensee, permittee, etc., as appropriate) for himself, his heirs, personal representatives, successors in interest, and assigns, as a part of the consideration hereof, does hereby covenant and agree (in the case of deeds and leases add "as a covenant running with the land") that in the event facilities are constructed, maintained, or otherwise operated on the said property described in this (deed, license, lease, permit, etc.) for a purpose for which a DOT program or activity is extended or for another purpose involving the provision of similar services or benefits, the (grantee, licensee, lessee, permittee, etc.) shall maintain and operate such facilities and services in compliance with all other requirements imposed pursuant to 49 CFR Part 21, Nondiscrimination in Federally Assisted Programs of the Department of Transportation, and as said Regulations may be amended.

2. The (grantee, licensee, lessee, permittee, etc., as appropriate) for himself, his heirs, personal representatives, successors in interest, and assigns, as a part of the consideration hereof, does hereby covenant and agree (in the case of deeds and leases add "as a covenant running with the land") that: (1) no person on the grounds of race, color, or national origin shall be excluded from participation in, denied the benefits of, or be otherwise subjected to discrimination in the use of said facilities, (2) that in the construction of any improvements on, over, or under such land and the furnishing of services thereon, no person on the grounds of race, color, or national origin shall be excluded from participation in, denied the benefits of, or otherwise be subjected to discrimination, (3) that the (grantee, licensee, permittee, etc.) shall use the premises in compliance with all other requirements imposed by or pursuant to 49 CFR Part 21, Nondiscrimination in Federally Assisted Programs of the Department of Transportation, and as said Regulations may be amended.

REQUIRED STATEMENTS
AIRPORT IMPROVEMENT PROGRAM PROJECTS

AIRPORT: Hurricane Municipal Airport (1L8)

LOCATION: Hurricane, Utah

AIP PROJECT NO.: 3-49-0012-012-2024

STATEMENTS APPLICABLE TO THIS PROJECT

☒ **a.** **INTEREST OF NEIGHBORING COMMUNITIES**: In formulating this project, consideration has been given to the interest of communities that are near Hurricane Municipal Airport.

☒ **b.** **THE DEVELOPMENT PROPOSED IN THIS PROJECT** will not require the use of publicly owned land from a public park, recreation area, wildlife and fowl refuge, or a historical site under Federal, State, or Local jurisdiction.

☒ **c.** **FBO COORDINATION**: The airport development proposed in this project has been coordinated with the Fixed Base Operator(s) utilizing Hurricane Municipal Airport, and they have been informed regarding the scope and nature of this project.

☒ **d.** **THE PROPOSED PROJECT IS CONSISTENT** with existing approved plans for the area surrounding the airport.

The above statements have been duly considered and are applicable to this project. (Provide comment for any statement not checked).

BY: _____ DATE: _____

TITLE: Nanette Billings, Mayor

SPONSORING AGENCY: Hurricane City

NOTE: Where opposition is stated to an airport development project, whether expressly or by proposed revision, the following specific information concerning the opposition to the project must be furnished.

a. Identification of the Federal, state, or local governmental agency, or the person or persons opposing the project; **N/A**

b. The nature and basis of opposition; **N/A**

c. Sponsor's plan to accommodate or otherwise satisfy the opposition; **N/A**

d. Whether an opportunity for a hearing was afforded, and if a hearing was held, an analysis of the facts developed at the hearing as they relate to the social, economic, and environmental aspects of the proposed project and its consistency with the goals and objectives of such urban planning as has been carried out by the community. **N/A**

e. If the opponents proposed any alternatives, what these alternatives were and the reason for nonacceptance; **N/A**

f. Sponsor's plans, if any, to minimize any adverse effects of the project; **N/A**

g. Benefits to be gained by the proposed development; and **N/A**

h. Any other pertinent information which would be of assistance in determining whether to proceed with the project. **N/A**

CERTIFICATION FOR CONTRACTS, GRANTS, LOANS, AND COOPERATIVE AGREEMENTS

The undersigned certifies, to the best of his or her knowledge and belief, that:

1. No Federal appropriated funds have been paid or will be paid, by or on behalf of the undersigned, to any person for influencing or attempting to influence an officer or employee of any agency, a Member of Congress, an officer or employee of Congress, or an employee of a Member of Congress in connection with the awarding of any Federal contract, the making of any Federal Grant, the making of any Federal loan, the entering into of any cooperative agreement, and the extension, continuation, renewal, amendment, or modification of any Federal contract, grant, loan, or cooperative agreement.

2. If any funds other than Federal appropriated funds have been paid or will be paid to any person for influencing or attempting to influence an officer or employee of any agency, a Member of Congress, an officer or employee of Congress, or an employee of a Member of Congress in connection with this Federal contract, grant, loan, or cooperative agreement, the undersigned shall complete and submit Standard Form LLL "Disclosure of Lobby Activities", in accordance with its instructions.

3. The undersigned shall require that the language of this certification be included in the award documents for all subawards at all tiers (including subcontracts, subgrants, and contracts under grants, loans, and cooperative agreements) and that all subrecipents shall certify and disclose accordingly.

This certification is a material representation of fact upon which reliance was placed when this transaction was made or entered into. Submission of this certification is a prerequisite for making or entering into this transaction imposed by section 1352, title 31, U.S. Code. Any person who fails to file the required certification shall be subject to a civil penalty of not less than $10,000 and not more than $100,000 for each such failure.

Signed _____ Date _____
Sponsor's Authorized Representative

Title Nanette Billings, Mayor

Drug-Free Workplace
Airport Improvement Program Sponsor Certification

Sponsor: Hurricane City

Airport: Hurricane Municipal Airport (1L8)

Project Number: A.I.P. 3-49-0012-012-2024

Description of Work: Install Weather Reporting Equipment (AWOS-III P/T)

Application

49 USC § 47105(d) authorizes the Secretary to require certification from the sponsor that it will comply with the statutory and administrative requirements in carrying out a project under the Airport Improvement Program (AIP). General requirements on the drug-free workplace within federal grant programs are described in 2 CFR part 182. Sponsors are required to certify they will be, or will continue to provide, a drug-free workplace in accordance with the regulation. The AIP project grant agreement contains specific assurances on the Drug-Free Workplace Act of 1988.

Certification Statements

Except for certification statements below marked as not applicable (N/A), this list includes major requirements of the construction project. Selecting “Yes” represents sponsor acknowledgement and confirmation of the certification statement. The term “will” means Sponsor action taken at appropriate time based on the certification statement focus area, but no later than the end of the project period of performance. This list is not comprehensive and does not relieve the sponsor from fully complying with all applicable statutory and administrative standards. The source of the requirement is referenced within parenthesis.

1. A statement has been or will be published prior to commencement of project notifying employees that the unlawful manufacture, distribution, dispensing, possession, or use of a controlled substance is prohibited in the sponsor's workplace, and specifying the actions to be taken against employees for violation of such prohibition (2 CFR § 182.205).

   ☒ Yes ☐ No ☐ N/A

2. An ongoing drug-free awareness program (2 CFR § 182.215) has been or will be established prior to commencement of project to inform employees about:

   a. The dangers of drug abuse in the workplace;

   b. The sponsor's policy of maintaining a drug-free workplace;

   c. Any available drug counseling, rehabilitation, and employee assistance programs; and

   d. The penalties that may be imposed upon employees for drug abuse violations occurring in the workplace.

   ☒ Yes ☐ No ☐ N/A

3. Each employee to be engaged in the performance of the work has been or will be given a copy of the statement required within item 1 above prior to commencement of project (2 CFR § 182.210).

   ☒ Yes ☐ No ☐ N/A

4. Employees have been or will be notified in the statement required by item 1 above that, as a condition employment under the grant (2 CFR § 182.205(c)), the employee will:

   a. Abide by the terms of the statement; and

   b. Notify the employer in writing of his or her conviction for a violation of a criminal drug statute occurring in the workplace no later than five calendar days after such conviction.

   ☒ Yes ☐ No ☐ N/A

5. The Federal Aviation Administration (FAA) will be notified in writing within 10 calendar days after receiving notice under item 4b above from an employee or otherwise receiving actual notice of such conviction (2 CFR § 182.225). Employers of convicted employees must provide notice, including position title of the employee, to the FAA (2 CFR § 182.300).

   ☒ Yes ☐ No ☐ N/A

6. One of the following actions (2 CFR § 182.225(b)) will be taken within 30 calendar days of receiving a notice under item 4b above with respect to any employee who is so convicted:

   a. Take appropriate personnel action against such an employee, up to and including termination, consistent with the requirements of the Rehabilitation Act of 1973, as amended; and

   b. Require such employee to participate satisfactorily in drug abuse assistance or rehabilitation programs approved for such purposes by a federal, state, or local health, law enforcement, or other appropriate agency.

   ☒ Yes ☐ No ☐ N/A

7. A good faith effort will be made, on a continuous basis, to maintain a drug-free workplace through implementation of items 1 through 6 above (2 CFR § 182.200).

   ☒ Yes ☐ No ☐ N/A

Site(s) of performance of work (2 CFR § 182.230):

Location 1
Name of Location: Hurricane Municipal Airport (1L8)
Address: 800 West 2300 South, Hurricane, UT 84737

Location 2 (if applicable)
Name of Location:
Address:

Location 3 (if applicable)
Name of Location:
Address:

Attach documentation clarifying any above item marked with a “No” response.

Sponsor’s Certification

I certify, for the project identified herein, responses to the forgoing items are accurate as marked and additional documentation for any item marked “no” is correct and complete.

Executed on this day of February , 2024 .

Name of Sponsor: Hurricane City

Name of Sponsor’s Authorized Official: Nanette Billings

Title of Sponsor’s Authorized Official: Mayor

Signature of Sponsor’s Authorized Official: _____

I declare under penalty of perjury that the foregoing is true and correct. I understand that knowingly and willfully providing false information to the federal government is a violation of 18 USC § 1001 (False Statements) and could subject me to fines, imprisonment, or both.

Certification and Disclosure Regarding Potential Conflicts of Interest
Airport Improvement Program Sponsor Certification

Sponsor: Hurricane City

Airport: Hurricane Municipal Airport (1L8)

Project Number: A.I.P. 3-49-0012-012-2024

Description of Work: Install Weather Reporting Equipment (AWOS-III P/T)

Application

Title 2 CFR § 200.112 and § 1201.112 address Federal Aviation Administration (FAA) requirements for conflict of interest. As a condition of eligibility under the Airport Improvement Program (AIP), sponsors must comply with FAA policy on conflict of interest. Such a conflict would arise when any of the following have a financial or other interest in the firm selected for award:

a) The employee, officer or agent,

b) Any member of his immediate family,

c) His or her partner, or

d) An organization which employs, or is about to employ, any of the above.

Selecting “Yes” represents sponsor or sub-recipient acknowledgement and confirmation of the certification statement. Selecting “No” represents sponsor or sub-recipient disclosure that it cannot fully comply with the certification statement. If “No” is selected, provide support information explaining the negative response as an attachment to this form. This includes whether the sponsor has established standards for financial interest that are not substantial or unsolicited gifts are of nominal value (2 CFR § 200.318(c)). The term “will” means Sponsor action taken at appropriate time based on the certification statement focus area, but no later than the end of the project period of performance.

Certification Statements

1. The sponsor or sub-recipient maintains a written standards of conduct governing conflict of interest and the performance of their employees engaged in the award and administration of contracts (2 CFR § 200.318(c)). To the extent permitted by state or local law or regulations, such standards of conduct provide for penalties, sanctions, or other disciplinary actions for violations of such standards by the sponsor’s and sub-recipient’s officers, employees, or agents, or by contractors or their agents.

   ☒ Yes ☐ No

2. The sponsor's or sub-recipient's officers, employees or agents have not and will not solicit or accept gratuities, favors or anything of monetary value from contractors, potential contractors, or parties to sub-agreements (2 CFR § 200.318(c)).

   ☒ Yes ☐ No

3. The sponsor or sub-recipient certifies that is has disclosed and will disclose to the FAA any known potential conflict of interest (2 CFR § 1200.112).

   ☒ Yes ☐ No

Attach documentation clarifying any above item marked with "no" response.

Sponsor's Certification

I certify, for the project identified herein, responses to the forgoing items are accurate as marked and have the explanation for any item marked "no" is correct and complete.

Executed on this day of February , 2024 .

Name of Sponsor: Hurricane City

Name of Sponsor's Authorized Official: Nanette Billings

Title of Sponsor's Authorized Official: Mayor

Signature of Sponsor's Authorized Official: _____

I declare under penalty of perjury that the foregoing is true and correct. I understand that knowingly and willfully providing false information to the federal government is a violation of 18 USC § 1001 (False Statements) and could subject me to fines, imprisonment, or both.

Selection of Consultants
Airport Improvement Program Sponsor Certification

Sponsor: Hurricane City

Airport: Hurricane Municipal Airport (1L8)

Project Number: A.I.P. 3-49-0012-012-2024

Description of Work: Install Weather Reporting Equipment (AWOS-III P/T)

Application
49 USC § 47105(d) authorizes the Secretary to require certification from the sponsor that it will comply with the statutory and administrative requirements in carrying out a project under the Airport Improvement Program (AIP). General requirements for selection of consultant services within federal grant programs are described in 2 CFR §§ 200.317-200.326. Sponsors may use other qualifications-based procedures provided they are equivalent to standards of Title 40 chapter 11 and FAA Advisory Circular 150/5100-14, Architectural, Engineering, and Planning Consultant Services for Airport Grant Projects.

Certification Statements
Except for certification statements below marked as not applicable (N/A), this list includes major requirements of the construction project. Selecting “Yes” represents sponsor acknowledgement and confirmation of the certification statement. The term “will” means Sponsor action taken at appropriate time based on the certification statement focus area, but no later than the end of the project period of performance. This list is not comprehensive and does not relieve the sponsor from fully complying with all applicable statutory and administrative standards. The source of the requirement is referenced within parenthesis.

1. Sponsor acknowledges their responsibility for the settlement of all contractual and administrative issues arising out of their procurement actions (2 CFR § 200.318(k)).

   ☒ Yes ☐ No ☐ N/A

2. Sponsor procurement actions ensure or will ensure full and open competition that does not unduly limit competition (2 CFR § 200.319).

   ☒ Yes ☐ No ☐ N/A

3. Sponsor has excluded or will exclude any entity that develops or drafts specifications, requirements, or statements of work associated with the development of a request-for-qualifications (RFQ) from competing for the advertised services (2 CFR § 200.319).

   ☒ Yes ☐ No ☐ N/A

4. The advertisement describes or will describe specific project statements-of-work that provide clear detail of required services without unduly restricting competition (2 CFR § 200.319).

   ☒ Yes ☐ No ☐ N/A

5. Sponsor has publicized or will publicize a RFQ that:

   a. Solicits an adequate number of qualified sources (2 CFR § 200.320(d)); and

   b. Identifies all evaluation criteria and relative importance (2 CFR § 200.320(d)).

   ☒ Yes ☐ No ☐ N/A

6. Sponsor has based or will base selection on qualifications, experience, and disadvantaged business enterprise participation with price not being a selection factor (2 CFR § 200.320(d)).

   ☒ Yes ☐ No ☐ N/A

7. Sponsor has verified or will verify that agreements exceeding $25,000 are not awarded to individuals or firms suspended, debarred or otherwise excluded from participating in federally assisted projects (2 CFR §180.300).

   ☒ Yes ☐ No ☐ N/A

8. A/E services covering multiple projects: Sponsor has agreed to or will agree to:

   a. Refrain from initiating work covered by this procurement beyond five years from the date of selection (AC 150/5100-14); and

   b. Retain the right to conduct new procurement actions for projects identified or not identified in the RFQ (AC 150/5100-14).

   ☒ Yes ☐ No ☐ N/A

9. Sponsor has negotiated or will negotiate a fair and reasonable fee with the firm they select as most qualified for the services identified in the RFQ (2 CFR § 200.323).

   ☒ Yes ☐ No ☐ N/A

10. The Sponsor's contract identifies or will identify costs associated with ineligible work separately from costs associated with eligible work (2 CFR § 200.302).

    ☒ Yes ☐ No ☐ N/A

11. Sponsor has prepared or will prepare a record of negotiations detailing the history of the procurement action, rationale for contract type and basis for contract fees (2 CFR §200.318(i)).

    ☒ Yes ☐ No ☐ N/A

12. Sponsor has incorporated or will incorporate mandatory contact provisions in the consultant contract for AIP-assisted work (49 U.S.C. Chapter 471 and 2 CFR part 200 Appendix II)

    ☒ Yes ☐ No ☐ N/A

13. For contracts that apply a time-and-material payment provision (also known as hourly rates, specific rates of compensation, and labor rates), the Sponsor has established or will establish:
    a. Justification that there is no other suitable contract method for the services (2 CFR §200.318(j));
    b. A ceiling price that the consultant exceeds at their risk (2 CFR §200.318(j)); and
    c. A high degree of oversight that assures consultant is performing work in an efficient manner with effective cost controls in place 2 CFR §200.318(j)).

    ☒ Yes ☐ No ☐ N/A

14. Sponsor is not using or will not use the prohibited cost-plus-percentage-of-cost (CPPC) contract method. (2 CFR § 200.323(d)).

    ☒ Yes ☐ No ☐ N/A

Attach documentation clarifying any above item marked with “no” response.

Sponsor’s Certification

I certify, for the project identified herein, responses to the forgoing items are accurate as marked and additional documentation for any item marked “no” is correct and complete.

I declare under penalty of perjury that the foregoing is true and correct. I understand that knowingly and willfully providing false information to the federal government is a violation of 18 USC § 1001 (False Statements) and could subject me to fines, imprisonment, or both.

Executed on this day of February , 2024 .

Name of Sponsor: Hurricane City

Name of Sponsor’s Authorized Official: Nanette Billings

Title of Sponsor’s Authorized Official: Mayor

Signature of Sponsor’s Authorized Official: _____

I declare under penalty of perjury that the foregoing is true and correct. I understand that knowingly and willfully providing false information to the federal government is a violation of 18 USC § 1001 (False Statements) and could subject me to fines, imprisonment, or both.

Project Plans and Specifications
Airport Improvement Program Sponsor Certification

Sponsor: Hurricane City

Airport: Hurricane Municipal Airport (1L8)

Project Number: A.I.P. 3-49-0012-012-2024

Description of Work: Install Weather Reporting Equipment (AWOS-III P/T)

Application

49 USC § 47105(d) authorizes the Secretary to require certification from the sponsor that it will comply with the statutory and administrative requirements in carrying out a project under the Airport Improvement Program (AIP). Labor and civil rights standards applicable to AIP are established by the Department of Labor (www.dol.gov/). AIP Grant Assurance C.1—General Federal Requirements identifies applicable federal laws, regulations, executive orders, policies, guidelines and requirements for assistance under AIP. A list of current advisory circulars with specific standards for procurement, design or construction of airports, and installation of equipment and facilities is referenced in standard airport sponsor Grant Assurance 34 contained in the grant agreement.

Certification Statements

Except for certification statements below marked as not applicable (N/A), this list includes major requirements of the construction project. Selecting “Yes” represents sponsor acknowledgement and confirmation of the certification statement. The term “will” means Sponsor action taken at appropriate time based on the certification statement focus area, but no later than the end of the project period of performance. This list is not comprehensive and does not relieve the sponsor from fully complying with all applicable statutory and administrative standards. The source of the requirement is referenced within parenthesis.

1. The plans and specifications were or will be prepared in accordance with applicable federal standards and requirements, so that no deviation or modification to standards set forth in the advisory circulars, or FAA-accepted state standard, is necessary other than those explicitly approved by the Federal Aviation Administration (FAA) (14 USC § 47105).

   ☒ Yes ☐ No ☐ N/A

2. Specifications incorporate or will incorporate a clear and accurate description of the technical requirement for the material or product that does not contain limiting or proprietary features that unduly restrict competition (2 CFR §200.319).

   ☒ Yes ☐ No ☐ N/A

3. The development that is included or will be included in the plans is depicted on the current airport layout plan as approved by the FAA (14 USC § 47107).

   ☒ Yes ☐ No ☐ N/A

4. Development and features that are ineligible or unallowable for AIP funding have been or will be omitted from the plans and specifications (FAA Order 5100.38, par. 3-43).

   ☒ Yes ☐ No ☐ N/A

5. The specification does not use or will not use “brand name” or equal to convey requirements unless sponsor requests and receives approval from the FAA to use brand name (FAA Order 5100.38, Table U-5).

   ☒ Yes ☐ No ☐ N/A

6. The specification does not impose or will not impose geographical preference in their procurement requirements (2 CFR §200.319(b) and FAA Order 5100.38, Table U-5).

   ☒ Yes ☐ No ☐ N/A

7. The use of prequalified lists of individuals, firms or products include or will include sufficient qualified sources that ensure open and free competition and that does not preclude potential entities from qualifying during the solicitation period (2 CFR §319(d)).

   ☒ Yes ☐ No ☐ N/A

8. Solicitations with bid alternates include or will include explicit information that establish a basis for award of contract that is free of arbitrary decisions by the sponsor (2 CFR § 200.319(a)(7)).

   ☒ Yes ☐ No ☐ N/A

9. Concurrence was or will be obtained from the FAA if Sponsor incorporates a value engineering clause into the contract (FAA Order 5100.38, par. 3-57).

   ☒ Yes ☐ No ☐ N/A

10. The plans and specifications incorporate or will incorporate applicable requirements and recommendations set forth in the federally approved environmental finding (49 USC §47106(c)).

    ☒ Yes ☐ No ☐ N/A

11. The design of all buildings comply or will comply with the seismic design requirements of 49 CFR § 41.120. (FAA Order 5100.38d, par. 3-92)

    ☐ Yes ☐ No ☒ N/A

12. The project specification include or will include process control and acceptance tests required for the project by as per the applicable standard:

    a. Construction and installation as contained in Advisory Circular (AC) 150/5370-10.

       ☒ Yes ☐ No ☐ N/A

b. Snow Removal Equipment as contained in AC 150/5220-20.

☐ Yes ☐ No ☒ N/A

c. Aircraft Rescue and Fire Fighting (ARFF) vehicles as contained in AC 150/5220-10.

☐ Yes ☐ No ☒ N/A

13. For construction activities within or near aircraft operational areas(AOA):

    a. The Sponsor has or will prepare a construction safety and phasing plan (CSPP) conforming to Advisory Circular 150/5370-2.

    b. Compliance with CSPP safety provisions has been or will be incorporated into the plans and specifications as a contractor requirement.

    c. Sponsor will not initiate work until receiving FAA's concurrence with the CSPP (FAA Order 5100.38, Par. 5-29).

    ☒ Yes ☐ No ☐ N/A

14. The project was or will be physically completed without federal participation in costs due to errors and omissions in the plans and specifications that were foreseeable at the time of project design (49 USC §47110(b)(1) and FAA Order 5100.38d, par. 3-100).

    ☒ Yes ☐ No ☐ N/A

Attach documentation clarifying any above item marked with "No" response.

Sponsor's Certification

I certify, for the project identified herein, responses to the forgoing items are accurate as marked and additional documentation for any item marked "no" is correct and complete.

Executed on this day of February , 2024 .

Name of Sponsor: Hurricane City

Name of Sponsor's Authorized Official: Nanette Billings

Title of Sponsor's Authorized Official: Mayor

Signature of Sponsor's Authorized Official: _____

I declare under penalty of perjury that the foregoing is true and correct. I understand that knowingly and willfully providing false information to the federal government is a violation of 18 USC § 1001 (False Statements) and could subject me to fines, imprisonment, or both.

Equipment and Construction Contracts
Airport Improvement Sponsor Certification

Sponsor: Hurricane City

Airport: Hurricane Municipal Airport (1L8)

Project Number: A.I.P. 3-49-0012-012-2024

Description of Work: Install Weather Reporting Equipment (AWOS-III P/T)

Application

49 USC § 47105(d) authorizes the Secretary to require certification from the sponsor that it will comply with the statutory and administrative requirements in carrying out a project under the Airport Improvement Program (AIP). General procurement standards for equipment and construction contracts within Federal grant programs are described in 2 CFR §§ 200.317-200.326. Labor and Civil Rights Standards applicable to the AIP are established by the Department of Labor (www.dol.gov) AIP Grant Assurance C.1—General Federal Requirements identifies all applicable Federal Laws, regulations, executive orders, policies, guidelines and requirements for assistance under the AIP. Sponsors may use state and local procedures provided the procurement conforms to these federal standards.

This certification applies to all equipment and construction projects. Equipment projects may or may not employ laborers and mechanics that qualify the project as a “covered contract” under requirements established by the Department of Labor requirements. Sponsor shall provide appropriate responses to the certification statements that reflect the character of the project regardless of whether the contract is for a construction project or an equipment project.

Certification Statements

Except for certification statements below marked as not applicable (N/A), this list includes major requirements of the construction project. Selecting “Yes” represents sponsor acknowledgement and confirmation of the certification statement. The term “will” means Sponsor action taken at appropriate time based on the certification statement focus area, but no later than the end of the project period of performance. This list is not comprehensive and does not relieve the sponsor from fully complying with all applicable statutory and administrative standards. The source of the requirement is referenced within parenthesis.

1. A written code or standard of conduct is or will be in effect prior to commencement of the project that governs the performance of the sponsor’s officers, employees, or agents in soliciting, awarding and administering procurement contracts (2 CFR § 200.318).

   ☒ Yes ☐ No ☐ N/A

2. For all contracts, qualified and competent personnel are or will be engaged to perform contract administration, engineering supervision, construction inspection, and testing (Grant Assurance C.17).

   ☒ Yes ☐ No ☐ N/A

3. Sponsors that are required to have a Disadvantage Business Enterprise (DBE) program on file with the FAA have included or will include clauses required by Title VI of the Civil Rights Act and 49 CFR Part 26 for Disadvantaged Business Enterprises in all contracts and subcontracts.

   ☒ Yes ☐ No ☐ N/A

4. Sponsors required to have a DBE program on file with the FAA have implemented or will implement monitoring and enforcement measures that:

   a. Ensure work committed to Disadvantaged Business Enterprises at contract award is actually performed by the named DBEs (49 CFR § 26.37(b));

   b. Include written certification that the sponsor has reviewed contract records and has monitored work sites for performance by DBE firms (49 CFR § 26.37(b)); and

   c. Provides for a running tally of payments made to DBE firms and a means for comparing actual attainments (i.e. payments) to original commitments (49 CFR § 26.37(c)).

   ☒ Yes ☐ No ☐ N/A

5. Sponsor procurement actions using the competitive sealed bid method (2 CFR § 200.320(c)). was or will be:

   a. Publicly advertised, allowing a sufficient response time to solicit an adequate number of interested contractors or vendors;

   b. Prepared to include a complete, adequate and realistic specification that defines the items or services in sufficient detail to allow prospective bidders to respond;

   c. Publicly opened at a time and place prescribed in the invitation for bids; and

   d. Prepared in a manner that result in a firm fixed price contract award to the lowest responsive and responsible bidder.

   ☒ Yes ☐ No ☐ N/A

6. For projects the Sponsor proposes to use the competitive proposal procurement method (2 CFR § 200.320(d)), Sponsor has requested or will request FAA approval prior to proceeding with a competitive proposal procurement by submitting to the FAA the following:

   a. Written justification that supports use of competitive proposal method in lieu of the preferred sealed bid procurement method;

   b. Plan for publicizing and soliciting an adequate number of qualified sources; and

   c. Listing of evaluation factors along with relative importance of the factors.

   ☒ Yes ☐ No ☐ N/A

7. For construction and equipment installation projects, the bid solicitation includes or will include the current federal wage rate schedule(s) for the appropriate type of work classifications (2 CFR Part 200, Appendix II).

   ☒ Yes ☐ No ☐ N/A

8. Concurrence was or will be obtained from the Federal Aviation Administration (FAA) prior to contract award under any of the following circumstances (Order 5100.38D):
    a. Only one qualified person/firm submits a responsive bid;
    b. Award is to be made to other than the lowest responsible bidder; and
    c. Life cycle costing is a factor in selecting the lowest responsive bidder.

    ☒ Yes ☐ No ☐ N/A

9. All construction and equipment installation contracts contain or will contain provisions for:
    a. Access to Records (§ 200.336)
    b. Buy American Preferences (Title 49 U.S.C. § 50101)
    c. Civil Rights - General Provisions and Title VI Assurances(41 CFR part 60)
    d. Federal Fair Labor Standards (29 U.S.C. § 201, et seq)
    e. Occupational Safety and Health Act requirements (20 CFR part 1920)
    f. Seismic Safety – building construction (49 CFR part 41)
    g. State Energy Conservation Requirements - as applicable(2 CFR part 200, Appendix II)
    h. U.S. Trade Restriction (49 CFR part 30)
    i. Veterans Preference (49 USC § 47112(c))

    ☒ Yes ☐ No ☐ N/A

10. All construction and equipment installation contracts exceeding $2,000 contain or will contain the provisions established by:
    a. Davis-Bacon and Related Acts (29 CFR part 5)
    b. Copeland “Anti-Kickback” Act (29 CFR parts 3 and 5)

    ☒ Yes ☐ No ☐ N/A

11. All construction and equipment installation contracts exceeding $3,000 contain or will contain a contract provision that discourages distracted driving (E.O. 13513).

    ☒ Yes ☐ No ☐ N/A

12. All contracts exceeding $10,000 contain or will contain the following provisions as applicable:
    a. Construction and equipment installation projects - Applicable clauses from 41 CFR Part 60 for compliance with Executive Orders 11246 and 11375 on Equal Employment Opportunity;
    b. Construction and equipment installation - Contract Clause prohibiting segregated facilities in accordance with 41 CFR part 60-1.8;
    c. Requirement to maximize use of products containing recovered materials in accordance with 2 CFR § 200.322 and 40 CFR part 247; and
    d. Provisions that address termination for cause and termination for convenience (2 CFR Part 200, Appendix II).

    ☒ Yes ☐ No ☐ N/A

13. All contracts and subcontracts exceeding $25,000: Measures are in place or will be in place (e.g. checking the System for Award Management) that ensure contracts and subcontracts are not awarded to individuals or firms suspended, debarred, or excluded from participating in federally assisted projects (2 CFR parts 180 and 1200).

    ☒ Yes ☐ No ☐ N/A

14. Contracts exceeding the simplified acquisition threshold (currently $250,000) include or will include provisions, as applicable, that address the following:

    a. Construction and equipment installation contracts - a bid guarantee of 5%, a performance bond of 100%, and a payment bond of 100% (2 CFR § 200.325);

    b. Construction and equipment installation contracts - requirements of the Contract Work Hours and Safety Standards Act (40 USC 3701-3708, Sections 103 and 107);

    c. Restrictions on Lobbying and Influencing (2 CFR part 200, Appendix II);

    d. Conditions specifying administrative, contractual and legal remedies for instances where contractor of vendor violate or breach the terms and conditions of the contract (2 CFR §200, Appendix II); and

    e. All Contracts - Applicable standards and requirements issued under Section 306 of the Clean Air Act (42 USC 7401-7671q), Section 508 of the Clean Water Act (33 USC 1251-1387, and Executive Order 11738.

    ☒ Yes ☐ No ☐ N/A

Attach documentation clarifying any above item marked with “No” response.

Sponsor’s Certification

I certify, for the project identified herein, responses to the forgoing items are accurate as marked and additional documentation for any item marked “no” is correct and complete.

Executed on this day of February , 2024 .

Name of Sponsor: Hurricane City

Name of Sponsor’s Authorized Official: Nanette Billings

Title of Sponsor’s Authorized Official: Mayor

Signature of Sponsor’s Authorized Official: _____

I declare under penalty of perjury that the foregoing is true and correct. I understand that knowingly and willfully providing false information to the federal government is a violation of 18 USC § 1001 (False Statements) and could subject me to fines, imprisonment, or both.

Construction Project Final Acceptance
Airport Improvement Program Sponsor Certification

Sponsor: Hurricane City

Airport: Hurricane Municipal Airport (1L8)

Project Number: A.I.P. 3-49-0012-012-2024

Description of Work: Install Weather Reporting Equipment (AWOS-III P/T)

Application

49 USC § 47105(d), authorizes the Secretary to require me certification from the sponsor that it will comply with the statutory and administrative requirements in carrying out a project under the Airport Improvement Program. General standards for final acceptance and close out of federally funded construction projects are in 2 CFR § 200.343 – Closeout and supplemented by FAA Order 5100.38. The sponsor must determine that project costs are accurate and proper in accordance with specific requirements of the grant agreement and contract documents.

Certification Statements

Except for certification statements below marked not applicable (N/A), this list includes major requirements of the construction project. Selecting “Yes” represents sponsor acknowledgment and confirmation of the certification statement. The term “will” means Sponsor action taken at appropriate time based on the certification statement focus area, but no later than the end of the project period of performance. This list is not comprehensive and does not relieve the sponsor from fully complying with all applicable statutory and administrative standards. The source of the requirement is referenced within parenthesis.

1. The personnel engaged in project administration, engineering supervision, project inspection, and acceptance testing were or will be determined to be qualified and competent to perform the work (Grant Assurance).

   ☒ Yes ☐ No ☐ N/A

2. Construction records, including daily logs, were or will be kept by the resident engineer/construction inspector that fully document contractor’s performance in complying with:

   a. Technical standards (Advisory Circular (AC) 150/5370-12);
   b. Contract requirements (2 CFR part 200 and FAA Order 5100.38); and
   c. Construction safety and phasing plan measures (AC 150/5370-2).

   ☒ Yes ☐ No ☐ N/A

3. All acceptance tests specified in the project specifications were or will be performed and documented. (AC 150/5370-12).

   ☒ Yes ☐ No ☐ N/A

4. Sponsor has taken or will take appropriate corrective action for any test result outside of allowable tolerances (AC 150/5370-12).

   ☒ Yes ☐ No ☐ N/A

5. Pay reduction factors required by the specifications were applied or will be applied in computing final payments with a summary made available to the FAA (AC 150/5370-10).

   ☒ Yes ☐ No ☐ N/A

6. Sponsor has notified, or will promptly notify the Federal Aviation Administration (FAA) of the following occurrences:

   a. Violations of any federal requirements set forth or included by reference in the contract documents (2 CFR part 200);
   b. Disputes or complaints concerning federal labor standards (29 CFR part 5); and
   c. Violations of or complaints addressing conformance with Equal Employment Opportunity or Disadvantaged Business Enterprise requirements (41 CFR Chapter 60 and 49 CFR part 26).

   ☒ Yes ☐ No ☐ N/A

7. Weekly payroll records and statements of compliance were or will be submitted by the prime contractor and reviewed by the sponsor for conformance with federal labor and civil rights requirements as required by FAA and U.S. Department of Labor (29 CFR Part 5).

   ☒ Yes ☐ No ☐ N/A

8. Payments to the contractor were or will be made in conformance with federal requirements and contract provisions using sponsor internal controls that include:

   a. Retaining source documentation of payments and verifying contractor billing statements against actual performance (2 CFR § 200.302 and FAA Order 5100.38);
   b. Prompt payment of subcontractors for satisfactory performance of work (49 CFR § 26.29);
   c. Release of applicable retainage upon satisfactory performance of work (49 CFR § 26.29); and
   d. Verification that payments to DBEs represent work the DBE performed by carrying out a commercially useful function (49 CFR §26.55).

   ☒ Yes ☐ No ☐ N/A

9. A final project inspection was or will be conducted with representatives of the sponsor and the contractor present that ensure:

   a. Physical completion of project work in conformance with approved plans and specifications (Order 5100.38);
   b. Necessary actions to correct punch list items identified during final inspection are complete (Order 5100.38); and
   c. Preparation of a record of final inspection and distribution to parties to the contract (Order 5100.38);

   ☒ Yes ☐ No ☐ N/A

10. The project was or will be accomplished without material deviations, changes, or modifications from approved plans and specifications, except as approved by the FAA (Order 5100.38).

    ☒ Yes ☐ No ☐ N/A

11. The construction of all buildings have complied or will comply with the seismic construction requirements of 49 CFR § 41.120.

    ☐ Yes ☐ No ☒ N/A

12. For development projects, sponsor has taken or will take the following close-out actions:

    a. Submit to the FAA a final test and quality assurance report summarizing acceptance test results, as applicable (Grant Condition);

    b. Complete all environmental requirements as established within the project environmental determination (Oder 5100.38); and

    c. Prepare and retain as-built plans (Order 5100.38).

    ☒ Yes ☐ No ☐ N/A

13. Sponsor has revised or will revise their airport layout plan (ALP) that reflects improvements made and has submitted or will submit an updated ALP to the FAA no later than 90 days from the period of performance end date. (49 USC § 47107 and Order 5100.38).

    ☒ Yes ☐ No ☐ N/A

Attach documentation clarifying any above item marked with “No” response.

Sponsor’s Certification

I certify, for the project identified herein, responses to the forgoing items are accurate as marked and additional documentation for any item marked “no” is correct and complete.

Executed on this day of February , 2024 .

Name of Sponsor: Hurricane City

Name of Sponsor’s Authorized Official: Nanette Billings

Title of Sponsor’s Authorized Official: Mayor

Signature of Sponsor’s Authorized Official: _____

I declare under penalty of perjury that the foregoing is true and correct. I understand that knowingly and willfully providing false information to the federal government is a violation of 18 USC § 1001 (False Statements) and could subject me to fines, imprisonment, or both.

Real Property Acquisition
Airport Improvement Program Sponsor Certification

Sponsor: Hurricane City

Airport: Hurricane Municipal Airport (1L8)

Project Number: A.I.P. 3-49-0012-012-2024

Description of Work: Install Weather Reporting Equipment (AWOS-III P/T)

Application

49 USC § 47105(d) authorizes the Secretary to require certification from the sponsor that it will comply with the statutory and administrative requirements in carrying out a project under the Airport Improvement Program (AIP). General requirements on real property acquisition and relocation assistance are in 49 CFR Part 24. The AIP project grant agreement contains specific requirements and assurances on the Uniform Relocation Assistance and Real Property Acquisition Policies Act of 1970 (Uniform Act), as amended.

Certification Statements

Except for certification statements below marked not applicable (N/A), this list includes major requirements of the real property acquisition project. Selecting “Yes” represents sponsor acknowledgement and confirmation of the certification statement. The term “will” means Sponsor action taken at appropriate time based on the certification statement focus area, but no later than the end of the project period of performance. This list is not comprehensive and does not relieve the sponsor from fully complying with all applicable statutory and administrative standards.

1. The sponsor’s attorney or other official has or will have good and sufficient title as well as title evidence on property in the project.

   ☒ Yes ☐ No ☐ N/A

2. If defects and/or encumbrances exist in the title that adversely impact the sponsor’s intended use of property in the project, they have been or will be extinguished, modified, or subordinated.

   ☒ Yes ☐ No ☐ N/A

3. If property for airport development is or will be leased, the following conditions have been met:

   a. The term is for 20 years or the useful life of the project;

   b. The lessor is a public agency; and

   c. The lease contains no provisions that prevent full compliance with the grant agreement.

   ☐ Yes ☐ No ☒ N/A

4. Property in the project is or will be in conformance with the current Exhibit A property map, which is based on deeds, title opinions, land surveys, the approved airport layout plan, and project documentation.

   ☒ Yes ☐ No ☐ N/A

5. For any acquisition of property interest in noise sensitive approach zones and related areas, property interest was or will be obtained to ensure land is used for purposes compatible with noise levels associated with operation of the airport.

   ☐ Yes ☐ No ☒ N/A

6. For any acquisition of property interest in runway protection zones and areas related to 14 CFR 77 surfaces or to clear other airport surfaces, property interest was or will be obtained for the following:

   a. The right of flight;

   b. The right of ingress and egress to remove obstructions; and

   c. The right to restrict the establishment of future obstructions.

   ☐ Yes ☐ No ☒ N/A

7. Appraisals prepared by qualified real estate appraisers hired by the sponsor include or will include the following:

   a. Valuation data to estimate the current market value for the property interest acquired on each parcel; and

   b. Verification that an opportunity has been provided to the property owner or representative to accompany appraisers during inspections.

   ☐ Yes ☐ No ☒ N/A

8. Each appraisal has been or will be reviewed by a qualified review appraiser to recommend an amount for the offer of just compensation, and the written appraisals as well as review appraisal are available to Federal Aviation Administration (FAA) for review.

   ☐ Yes ☐ No ☒ N/A

9. A written offer to acquire each parcel was or will be presented to the property owner for not less than the approved amount of just compensation.

   ☐ Yes ☐ No ☒ N/A

10. Effort was or will be made to acquire each property through the following negotiation procedures:

    a. No coercive action to induce agreement; and

    b. Supporting documents for settlements included in the project files.

    ☐ Yes ☐ No ☒ N/A

11. If a negotiated settlement is not reached, the following procedures were or will be used:
    a. Condemnation initiated and a court deposit not less than the just compensation made prior to possession of the property; and
    b. Supporting documents for awards included in the project files.

    ☐ Yes ☐ No ☒ N/A

12. If displacement of persons, businesses, farm operations, or non-profit organizations is involved, a relocation assistance program was or will be established, with displaced parties receiving general information on the program in writing, including relocation eligibility, and a 90-day notice to vacate.

    ☐ Yes ☐ No ☒ N/A

13. Relocation assistance services, comparable replacement housing, and payment of necessary relocation expenses were or will be provided within a reasonable time period for each displaced occupant in accordance with the Uniform Act.

    ☐ Yes ☐ No ☒ N/A

Attach documentation clarifying any above item marked with “No” response.

Sponsor’s Certification

I certify, for the project identified herein, responses to the forgoing items are accurate as marked and additional documentation for any item marked “no” is correct and complete.

Executed on this day of February , 2024 .

Name of Sponsor: Hurricane City

Name of Sponsor’s Authorized Official: Nanette Billings

Title of Sponsor’s Authorized Official: Mayor

Signature of Sponsor’s Designated Official Representative: _____

I declare under penalty of perjury that the foregoing is true and correct. I understand that knowingly and willfully providing false information to the federal government is a violation of 18 USC § 1001 (False Statements) and could subject me to fines, imprisonment, or both.

FAA
Airports

Current FAA Advisory Circulars Required for Use in AIP Funded, BIL Funded, and PFC Approved Projects

Updated: 11/17/2022

View current and previous versions of these ACs and any associated changes at:
http://www.faa.gov/airports/resources/advisory_circulars and
http://www.faa.gov/regulations_policies/advisory_circulars/. [1]

NUMBER	TITLE
70/7460-1M	Obstruction Marking and Lighting
150/5000-9B	Guidelines for the Sound Insulation of Residences Exposed to Aircraft Operations
150/5000-17	Critical Aircraft and Regular Use Determination
150/5020-1	Noise Control and Compatibility Planning for Airports
150/5070-6B, Changes 1 - 2	Airport Master Plans
150/5070-7 Change 1	The Airport System Planning Process
150/5100-13C	Development of State Aviation Standards for Airport Pavement Construction
150/5200-28G	Notices to Airmen (NOTAMs) for Airport Operators
150/5200-30D, Changes 1 - 2	Airport Field Condition Assessments and Winter Operations Safety
150/5200-31C, Changes 1 - 2	Airport Emergency Plan
150/5200-33C	Hazardous Wildlife Attractants on or near Airports

[1] All grant recipients are responsible for reviewing errata sheets and addendums pertaining to these Advisory Circulars.

NUMBER	TITLE
150/5200-34A	Construction or Establishment of Landfills Near Public Airports
150/5200-38	Protocol for the Conduct and Review of Wildlife Hazard Site Visits, Wildlife Hazard Assessments, and Wildlife Hazard Management Plans
150/5210-5D	Painting, Marking, and Lighting of Vehicles Used on an Airport
150/5210-7D	Aircraft Rescue and Fire Fighting Communications
150/5210-13C	Airport Water Rescue Plans and Equipment
150/5210-14B	Aircraft Rescue Fire Fighting Equipment, Tools and Clothing
150/5210-15A	Aircraft Rescue and Firefighting Station Building Design
150/5210-18A	Systems for Interactive Training of Airport Personnel
150/5210-19A	Driver's Enhanced Vision System (DEVs)
150/5220-10E	Guide Specification for Aircraft Rescue and Fire Fighting (ARFF) Vehicles
150/5220-16E, Change 1	Automated Weather Observing Systems (AWOS) for Non-Federal Applications
150/5220-17B	Aircraft Rescue and Fire Fighting (ARFF) Training Facilities
150/5220-18A	Buildings for Storage and Maintenance of Airport Snow and Ice Control Equipment and Materials
150/5220-20A	Airport Snow and Ice Control Equipment
150/5220-21C	Aircraft Boarding Equipment
150/5220-22B	Engineered Materials Arresting Systems (EMAS) for Aircraft Overruns
150/5220-23A	Frangible Connections
150/5220-24	Airport Foreign Object Debris (FOD) Detection Equipment
150/5220-25	Airport Avian Radar Systems
150/5220-26, Changes 1 - 2	Airport Ground Vehicle Automatic Dependent Surveillance - Broadcast (ADS-B) Out Squitter Equipment
150/5230-4C	Aircraft Fuel Storage, Handling, Training, and Dispensing on Airports
150/5300-13B	Airport Design
150/5300-14D	Design of Aircraft Deicing Facilities
150/5300-15A	Use of Value Engineering for Engineering and Design of Airport Grant Projects

NUMBER	TITLE
150/5300-16B	General Guidance and Specifications for Aeronautical Surveys: Establishment of Geodetic Control and Submission to the National Geodetic Survey
150/5300-17C, Change 1	Standards for Using Remote Sensing Technologies in Airport Surveys
150/5300-18B, Change 1	General Guidance and Specifications for Submission of Aeronautical Surveys to NGS: Field Data Collection and Geographic Information System (GIS) Standards
150/5300-19	Airport Data and Information Program
150/5320-5D	Airport Drainage Design
150/5320-6G	Airport Pavement Design and Evaluation
150/5320-12C, Changes 1 - 8	Measurement, Construction, and Maintenance of Skid Resistant Airport Pavement Surfaces
150/5320-15A	Management of Airport Industrial Waste
150/5320-17A	Airfield Pavement Surface Evaluation and Rating Manuals
150/5325-4B	Runway Length Requirements for Airport Design
150/5335-5D	Standardized Method of Reporting Airport Pavement Strength - PCR
150/5340-1M, Change 1	Standards for Airport Markings
150/5340-5D	Segmented Circle Airport Marker System
150/5340-18G, Change 1	Standards for Airport Sign Systems
150/5340-26C	Maintenance of Airport Visual Aid Facilities
150/5340-30J	Design and Installation Details for Airport Visual Aids
150/5345-3G	Specification for L-821, Panels for the Control of Airport Lighting
150/5345-5B	Specifications for Airport Lighting Circuit Selector Switch
150/5345-7F	Specification for L-824 Underground Electrical Cable for Airport Lighting Circuits
150/5345-10H	Specification for Constant Current Regulators and Regulator Monitors
150/5345-12F	Specification for Airport and Heliport Beacons

NUMBER	TITLE
150/5345-13B	Specification for L-841 Auxiliary Relay Cabinet Assembly for Pilot Control of Airport Lighting Circuits
150/5345-26E	FAA Specification For L-823 Plug and Receptacle, Cable Connectors
150/5345-27F	FAA Specification for Wind Cone Assemblies
150/5345-28H	Precision Approach Path Indicator (PAPI) Systems
150/5345-39E	Specification for L-853, Runway and Taxiway Retroreflective Markers
150/5345-42J	Specification for Airport Light Bases, Transformer Housings, Junction Boxes, and Accessories
150/5345-43J	Specification for Obstruction Lighting Equipment
150/5345-44K	Specification for Runway and Taxiway Signs
150/5345-45C	Low-Impact Resistant (LIR) Structures
150/5345-46E	Specification for Runway and Taxiway Light Fixtures
150/5345-47C	Specification for Series to Series Isolation Transformers for Airport Lighting Systems
150/5345-49D	Specification L-854, Radio Control Equipment
150/5345-50B	Specification for Portable Runway and Taxiway Lights
150/5345-51B	Specification for Discharge-Type Flashing Light Equipment
150/5345-52A	Generic Visual Glideslope Indicators (GVGI)
150/5345-53D	Airport Lighting Equipment Certification Program
150/5345-54B	Specification for L-884, Power and Control Unit for Land and Hold Short Lighting Systems
150/5345-55A	Specification for L-893, Lighted Visual Aid to Indicate Temporary Runway Closure
150/5345-56B	Specification for L-890 Airport Lighting Control and Monitoring System (ALCMS)
150/5360-12F	Airport Signing and Graphics
150/5360-13A	Airport Terminal Planning
150/5360-14A	Access to Airports By Individuals With Disabilities
150/5370-2G	Operational Safety on Airports During Construction

NUMBER	TITLE
150/5370-10H	Standard Specifications for Construction of Airports
150/5370-11B	Use of Nondestructive Testing in the Evaluation of Airport Pavements
150/5370-13A	Off-Peak Construction of Airport Pavements Using Hot-Mix Asphalt
150/5370-15B	Airside Applications for Artificial Turf
150/5370-16	Rapid Construction of Rigid (Portland Cement Concrete) Airfield Pavements
150/5370-17	Airside Use of Heated Pavement Systems
150/5380-6C	Guidelines and Procedures for Maintenance of Airport Pavements
150/5380-7B	Airport Pavement Management Program
150/5380-9	Guidelines and Procedures for Measuring Airfield Pavement Roughness
150/5390-2C	Heliport Design
150/5395-1B	Seaplane Bases

THE FOLLOWING ADDITIONAL ADVISORY CIRCULARS APPLY TO AIP AND BIL PROJECTS ONLY

NUMBER	TITLE
150/5100-14E, Change 1	Architectural, Engineering, and Planning Consultant Services for Airport Grant Projects
150/5100-17, Changes 1 - 7	Land Acquisition and Relocation Assistance for Airport Improvement Program Assisted Projects
150/5100-21	State Block Grant Program
150/5370-12B	Quality Management for Federally Funded Airport Construction Projects

SAM.GOV

CITY OF HURRICANE

Unique Entity ID	CAGE / NCAGE	Purpose of Registration
PNS1SKQDNZ58	**5EC20**	**Federal Assistance Awards Only**
Registration Status	Expiration Date	
Active Registration	**Jan 26, 2024**	
Physical Address	Mailing Address	
147 N 870 W **Hurricane, Utah 84737-1671** **United States**	**147 N 870 W** **Hurricane, Utah 84737-1671** **United States**	

Business Information

Doing Business as	Division Name	Division Number
(blank)	**(blank)**	**(blank)**
Congressional District	State / Country of Incorporation	URL
Utah 02	**(blank) / (blank)**	**(blank)**

Registration Dates

Activation Date	Submission Date	Initial Registration Date
Jan 30, 2023	**Jan 26, 2023**	**Apr 9, 2009**

Entity Dates

Entity Start Date	Fiscal Year End Close Date
Sep 25, 1975	**Jun 30**

Immediate Owner

CAGE	Legal Business Name
(blank)	**(blank)**

Highest Level Owner

CAGE	Legal Business Name
(blank)	**(blank)**

Executive Compensation

Registrants in the System for Award Management (SAM) respond to the Executive Compensation questions in accordance with Section 6202 of P.L. 110-252, amending the Federal Funding Accountability and Transparency Act (P.L. 109-282). This information is not displayed in SAM. It is sent to USAspending.gov for display in association with an eligible award. Maintaining an active registration in SAM demonstrates the registrant responded to the questions.

Proceedings Questions

Registrants in the System for Award Management (SAM.gov) respond to proceedings questions in accordance with FAR 52.209-7, FAR 52.209-9, or 2. C.F.R. 200 Appendix XII. Their responses are displayed in the responsibility/qualification section of SAM.gov. Maintaining an active registration in SAM.gov demonstrates the registrant responded to the proceedings questions.

Exclusion Summary

Active Exclusions Records?

No

SAM Search Authorization

I authorize my entity's non-sensitive information to be displayed in SAM public search results:

Yes

Entity Types

Business Types

Entity Structure	Entity Type	Organization Factors
U.S. Government Entity	**US Local Government**	**(blank)**
Profit Structure		
(blank)		

Socio-Economic Types

Check the registrant's Reps & Certs, if present, under FAR 52.212-3 or FAR 52.219-1 to determine if the entity is an SBA-certified HUBZone small business concern. Additional small business information may be found in the SBA's Dynamic Small Business Search if the entity completed the SBA supplemental pages during registration.

Government Types

U.S. Local Government
Municipality
City

Financial Information

Accepts Credit Card Payments	Debt Subject To Offset
No	**No**

EFT Indicator	CAGE Code
0000	**5EC20**

Points of Contact

Electronic Business

Lynn L Excell, Chief
147 N 870 W
Hurricane, Utah 84737
United States

Crystal A Wright
90 S 700 W
Hurricane, Utah 84737
United States

Government Business

Lynn L Excell, Chief
147 N 870 W
Hurricane, Utah 84737
United States

Crystal A Wright
90 S 700 W
Hurricane, Utah 84737
United States

Past Performance

Lynn L Excell, Chief
147 N 870 W
Hurricane, Utah 84737
United States

Crystal A Wright
90 S 700 W
Hurricane, Utah 84737
United States

Service Classifications

NAICS Codes

Primary	NAICS Codes	NAICS Title

Disaster Response

This entity does not appear in the disaster response registry.

FAA
Airports

ASSURANCES

AIRPORT SPONSORS

A. General.

1. These assurances shall be complied with in the performance of grant agreements for airport development, airport planning, and noise compatibility program grants for airport sponsors.
2. These assurances are required to be submitted as part of the project application by sponsors requesting funds under the provisions of Title 49, U.S.C., subtitle VII, as amended. As used herein, the term "public agency sponsor" means a public agency with control of a public-use airport; the term "private sponsor" means a private owner of a public-use airport; and the term "sponsor" includes both public agency sponsors and private sponsors.
3. Upon acceptance of this grant offer by the sponsor, these assurances are incorporated in and become part of this Grant Agreement.

B. Duration and Applicability.

1. **Airport development or Noise Compatibility Program Projects Undertaken by a Public Agency Sponsor.**

   The terms, conditions and assurances of this Grant Agreement shall remain in full force and effect throughout the useful life of the facilities developed or equipment acquired for an airport development or noise compatibility program project, or throughout the useful life of the project items installed within a facility under a noise compatibility program project, but in any event not to exceed twenty (20) years from the date of acceptance of a grant offer of Federal funds for the project. However, there shall be no limit on the duration of the assurances regarding Exclusive Rights and Airport Revenue so long as the airport is used as an airport. There shall be no limit on the duration of the terms, conditions, and assurances with respect to real property acquired with federal funds. Furthermore, the duration of the Civil Rights assurance shall be specified in the assurances.

2. **Airport Development or Noise Compatibility Projects Undertaken by a Private Sponsor.**

   The preceding paragraph (1) also applies to a private sponsor except that the useful life of project items installed within a facility or the useful life of the facilities developed or equipment acquired under an airport development or noise compatibility program project shall be no less than ten (10) years from the date of acceptance of Federal aid for the project.

3. **Airport Planning Undertaken by a Sponsor.**

   Unless otherwise specified in this Grant Agreement, only Assurances 1, 2, 3, 5, 6, 13, 18, 23, 25, 30, 32, 33, 34, and 37 in Section C apply to planning projects. The terms, conditions, and

assurances of this Grant Agreement shall remain in full force and effect during the life of the project; there shall be no limit on the duration of the assurances regarding Exclusive Rights and Airport Revenue so long as the airport is used as an airport.

C. Sponsor Certification.

The sponsor hereby assures and certifies, with respect to this grant that:

1. General Federal Requirements

It will comply with all applicable Federal laws, regulations, executive orders, policies, guidelines, and requirements as they relate to the application, acceptance, and use of Federal funds for this Grant including but not limited to the following:

FEDERAL LEGISLATION

a. 49 U.S.C. subtitle VII, as amended.

b. Davis-Bacon Act, as amended — 40 U.S.C. §§ 3141-3144, 3146, and 3147, et seq.[1]

c. Federal Fair Labor Standards Act – 29 U.S.C. § 201, et seq.

d. Hatch Act – 5 U.S.C. § 1501, et seq.[2]

e. Uniform Relocation Assistance and Real Property Acquisition Policies Act of 1970, 42 U.S.C. § 4601, et seq.[1, 2]

f. National Historic Preservation Act of 1966 – Section 106 – 54 U.S.C. § 306108.[1]

g. Archeological and Historic Preservation Act of 1974 – 54 U.S.C. § 312501, et seq.[1]

h. Native Americans Grave Repatriation Act – 25 U.S.C. § 3001, et seq.

i. Clean Air Act, P.L. 90-148, as amended – 42 U.S.C. § 7401, et seq.

j. Coastal Zone Management Act, P.L. 92-583, as amended – 16 U.S.C. § 1451, et seq.

k. Flood Disaster Protection Act of 1973 – Section 102(a) - 42 U.S.C. § 4012a.[1]

l. 49 U.S.C. § 303, (formerly known as Section 4(f)).

m. Rehabilitation Act of 1973 – 29 U.S.C. § 794.

n. Title VI of the Civil Rights Act of 1964 (42 U.S.C. § 2000d et seq., 78 stat. 252) (prohibits discrimination on the basis of race, color, national origin).

o. Americans with Disabilities Act of 1990, as amended, (42 U.S.C. § 12101 et seq.) (prohibits discrimination on the basis of disability).

p. Age Discrimination Act of 1975 – 42 U.S.C. § 6101, et seq.

q. American Indian Religious Freedom Act, P.L. 95-341, as amended.

r. Architectural Barriers Act of 1968, as amended – 42 U.S.C. § 4151, et seq.[1]

s. Powerplant and Industrial Fuel Use Act of 1978 – Section 403 – 42 U.S.C. § 8373.[1]

t. Contract Work Hours and Safety Standards Act – 40 U.S.C. § 3701, et seq.[1]

u. Copeland Anti-kickback Act – 18 U.S.C. § 874.[1]

v. National Environmental Policy Act of 1969 – 42 U.S.C. § 4321, et seq.[1]

w. Wild and Scenic Rivers Act, P.L. 90-542, as amended – 16 U.S.C. § 1271, et seq.

x. Single Audit Act of 1984 – 31 U.S.C. § 7501, et seq.[2]

y. Drug-Free Workplace Act of 1988 – 41 U.S.C. §§ 8101 through 8105.

z. The Federal Funding Accountability and Transparency Act of 2006, as amended (P.L. 109-282, as amended by section 6202 of P.L. 110-252).

aa. Civil Rights Restoration Act of 1987, P.L. 100-259.

bb. Build America, Buy America Act, P.L. 117-58, Title IX.

EXECUTIVE ORDERS

a. Executive Order 11246 – Equal Employment Opportunity[1]

b. Executive Order 11990 – Protection of Wetlands

c. Executive Order 11998 – Flood Plain Management

d. Executive Order 12372 – Intergovernmental Review of Federal Programs

e. Executive Order 12699 – Seismic Safety of Federal and Federally Assisted New Building Construction[1]

f. Executive Order 12898 – Environmental Justice

g. Executive Order 13166 – Improving Access to Services for Persons with Limited English Proficiency

h. Executive Order 13985 – Executive Order on Advancing Racial Equity and Support for Underserved Communities Through the Federal Government

i. Executive Order 13988 – Preventing and Combating Discrimination on the Basis of Gender Identity or Sexual Orientation

j. Executive Order 14005 – Ensuring the Future is Made in all of America by All of America's Workers

k. Executive Order 14008 – Tackling the Climate Crisis at Home and Abroad

FEDERAL REGULATIONS

a. 2 CFR Part 180 – OMB Guidelines to Agencies on Governmentwide Debarment and Suspension (Nonprocurement).

b. 2 CFR Part 200 – Uniform Administrative Requirements, Cost Principles, and Audit Requirements for Federal Awards. [4, 5]

c. 2 CFR Part 1200 – Nonprocurement Suspension and Debarment.

d. 14 CFR Part 13 – Investigative and Enforcement Procedures.

e. 14 CFR Part 16 – Rules of Practice for Federally-Assisted Airport Enforcement Proceedings.

f. 14 CFR Part 150 – Airport Noise Compatibility Planning.

g. 28 CFR Part 35 – Nondiscrimination on the Basis of Disability in State and Local Government Services.

h. 28 CFR § 50.3 – U.S. Department of Justice Guidelines for the Enforcement of Title VI of the Civil Rights Act of 1964.

i. 29 CFR Part 1 – Procedures for Predetermination of Wage Rates.[1]

j. 29 CFR Part 3 – Contractors and Subcontractors on Public Building or Public Work Financed in Whole or in Part by Loans or Grants from the United States.[1]

k. 29 CFR Part 5 – Labor Standards Provisions Applicable to Contracts Covering Federally Financed and Assisted Construction (Also Labor Standards Provisions Applicable to Nonconstruction Contracts Subject to the Contract Work Hours and Safety Standards Act).[1]

l. 41 CFR Part 60 – Office of Federal Contract Compliance Programs, Equal Employment Opportunity, Department of Labor (Federal and Federally-assisted contracting requirements).[1]

m. 49 CFR Part 20 – New Restrictions on Lobbying.

n. 49 CFR Part 21 – Nondiscrimination in Federally-Assisted Programs of the Department of Transportation - Effectuation of Title VI of the Civil Rights Act of 1964.

o. 49 CFR Part 23 – Participation by Disadvantage Business Enterprise in Airport Concessions.

p. 49 CFR Part 24 – Uniform Relocation Assistance and Real Property Acquisition for Federal and Federally-Assisted Programs.[1, 2]

q. 49 CFR Part 26 – Participation by Disadvantaged Business Enterprises in Department of Transportation Financial Assistance Programs.

r. 49 CFR Part 27 – Nondiscrimination on the Basis of Disability in Programs or Activities Receiving Federal Financial Assistance.[1]

s. 49 CFR Part 28 – Enforcement of Nondiscrimination on the Basis of Handicap in Programs or Activities Conducted by the Department of Transportation.

t. 49 CFR Part 30 – Denial of Public Works Contracts to Suppliers of Goods and Services of Countries That Deny Procurement Market Access to U.S. Contractors.

u. 49 CFR Part 32 – Governmentwide Requirements for Drug-Free Workplace (Financial Assistance).

v. 49 CFR Part 37 – Transportation Services for Individuals with Disabilities (ADA).

w. 49 CFR Part 38 – Americans with Disabilities Act (ADA) Accessibility Specifications for Transportation Vehicles.

x. 49 CFR Part 41 – Seismic Safety.

FOOTNOTES TO ASSURANCE (C)(1)

[1] These laws do not apply to airport planning sponsors.

[2] These laws do not apply to private sponsors.

[3] 2 CFR Part 200 contains requirements for State and Local Governments receiving Federal assistance. Any requirement levied upon State and Local Governments by this regulation shall

apply where applicable to private sponsors receiving Federal assistance under Title 49, United States Code.

[4] Cost principles established in 2 CFR part 200 subpart E must be used as guidelines for determining the eligibility of specific types of expenses.

[5] Audit requirements established in 2 CFR part 200 subpart F are the guidelines for audits.

SPECIFIC ASSURANCES

Specific assurances required to be included in grant agreements by any of the above laws, regulations or circulars are incorporated by reference in this Grant Agreement.

2. Responsibility and Authority of the Sponsor.

a. Public Agency Sponsor:

It has legal authority to apply for this Grant, and to finance and carry out the proposed project; that a resolution, motion or similar action has been duly adopted or passed as an official act of the applicant's governing body authorizing the filing of the application, including all understandings and assurances contained therein, and directing and authorizing the person identified as the official representative of the applicant to act in connection with the application and to provide such additional information as may be required.

b. Private Sponsor:

It has legal authority to apply for this Grant and to finance and carry out the proposed project and comply with all terms, conditions, and assurances of this Grant Agreement. It shall designate an official representative and shall in writing direct and authorize that person to file this application, including all understandings and assurances contained therein; to act in connection with this application; and to provide such additional information as may be required.

3. Sponsor Fund Availability.

It has sufficient funds available for that portion of the project costs which are not to be paid by the United States. It has sufficient funds available to assure operation and maintenance of items funded under this Grant Agreement which it will own or control.

4. Good Title.

a. It, a public agency or the Federal government, holds good title, satisfactory to the Secretary, to the landing area of the airport or site thereof, or will give assurance satisfactory to the Secretary that good title will be acquired.

b. For noise compatibility program projects to be carried out on the property of the sponsor, it holds good title satisfactory to the Secretary to that portion of the property upon which Federal funds will be expended or will give assurance to the Secretary that good title will be obtained.

5. Preserving Rights and Powers.

a. It will not take or permit any action which would operate to deprive it of any of the rights and powers necessary to perform any or all of the terms, conditions, and assurances in this Grant Agreement without the written approval of the Secretary, and will act promptly to acquire, extinguish or modify any outstanding rights or claims of right of others which would interfere

with such performance by the sponsor. This shall be done in a manner acceptable to the Secretary.

b. Subject to the FAA Act of 2018, Public Law 115-254, Section 163, it will not sell, lease, encumber, or otherwise transfer or dispose of any part of its title or other interests in the property shown on Exhibit A to this application or, for a noise compatibility program project, that portion of the property upon which Federal funds have been expended, for the duration of the terms, conditions, and assurances in this Grant Agreement without approval by the Secretary. If the transferee is found by the Secretary to be eligible under Title 49, United States Code, to assume the obligations of this Grant Agreement and to have the power, authority, and financial resources to carry out all such obligations, the sponsor shall insert in the contract or document transferring or disposing of the sponsor's interest, and make binding upon the transferee all of the terms, conditions, and assurances contained in this Grant Agreement.

c. For all noise compatibility program projects which are to be carried out by another unit of local government or are on property owned by a unit of local government other than the sponsor, it will enter into an agreement with that government. Except as otherwise specified by the Secretary, that agreement shall obligate that government to the same terms, conditions, and assurances that would be applicable to it if it applied directly to the FAA for a grant to undertake the noise compatibility program project. That agreement and changes thereto must be satisfactory to the Secretary. It will take steps to enforce this agreement against the local government if there is substantial non-compliance with the terms of the agreement.

d. For noise compatibility program projects to be carried out on privately owned property, it will enter into an agreement with the owner of that property which includes provisions specified by the Secretary. It will take steps to enforce this agreement against the property owner whenever there is substantial non-compliance with the terms of the agreement.

e. If the sponsor is a private sponsor, it will take steps satisfactory to the Secretary to ensure that the airport will continue to function as a public-use airport in accordance with these assurances for the duration of these assurances.

f. If an arrangement is made for management and operation of the airport by any agency or person other than the sponsor or an employee of the sponsor, the sponsor will reserve sufficient rights and authority to ensure that the airport will be operated and maintained in accordance with Title 49, United States Code, the regulations and the terms, conditions and assurances in this Grant Agreement and shall ensure that such arrangement also requires compliance therewith.

g. Sponsors of commercial service airports will not permit or enter into any arrangement that results in permission for the owner or tenant of a property used as a residence, or zoned for residential use, to taxi an aircraft between that property and any location on airport. Sponsors of general aviation airports entering into any arrangement that results in permission for the owner of residential real property adjacent to or near the airport must comply with the requirements of Sec. 136 of Public Law 112-95 and the sponsor assurances.

6. Consistency with Local Plans.

The project is reasonably consistent with plans (existing at the time of submission of this application) of public agencies that are authorized by the State in which the project is located to plan for the development of the area surrounding the airport.

7. **Consideration of Local Interest.**

   It has given fair consideration to the interest of communities in or near where the project may be located.

8. **Consultation with Users.**

   In making a decision to undertake any airport development project under Title 49, United States Code, it has undertaken reasonable consultations with affected parties using the airport at which project is proposed.

9. **Public Hearings.**

   In projects involving the location of an airport, an airport runway, or a major runway extension, it has afforded the opportunity for public hearings for the purpose of considering the economic, social, and environmental effects of the airport or runway location and its consistency with goals and objectives of such planning as has been carried out by the community and it shall, when requested by the Secretary, submit a copy of the transcript of such hearings to the Secretary. Further, for such projects, it has on its management board either voting representation from the communities where the project is located or has advised the communities that they have the right to petition the Secretary concerning a proposed project.

10. **Metropolitan Planning Organization.**

    In projects involving the location of an airport, an airport runway, or a major runway extension at a medium or large hub airport, the sponsor has made available to and has provided upon request to the metropolitan planning organization in the area in which the airport is located, if any, a copy of the proposed amendment to the airport layout plan to depict the project and a copy of any airport master plan in which the project is described or depicted.

11. **Pavement Preventive Maintenance-Management.**

    With respect to a project approved after January 1, 1995, for the replacement or reconstruction of pavement at the airport, it assures or certifies that it has implemented an effective airport pavement maintenance-management program and it assures that it will use such program for the useful life of any pavement constructed, reconstructed or repaired with Federal financial assistance at the airport. It will provide such reports on pavement condition and pavement management programs as the Secretary determines may be useful.

12. **Terminal Development Prerequisites.**

    For projects which include terminal development at a public use airport, as defined in Title 49, it has, on the date of submittal of the project grant application, all the safety equipment required for certification of such airport under 49 U.S.C. § 44706, and all the security equipment required by rule or regulation, and has provided for access to the passenger enplaning and deplaning area of such airport to passengers enplaning and deplaning from aircraft other than air carrier aircraft.

13. **Accounting System, Audit, and Record Keeping Requirements.**

    a. It shall keep all project accounts and records which fully disclose the amount and disposition by the recipient of the proceeds of this Grant, the total cost of the project in connection with which this Grant is given or used, and the amount or nature of that portion of the cost of the project supplied by other sources, and such other financial records pertinent to the project. The

accounts and records shall be kept in accordance with an accounting system that will facilitate an effective audit in accordance with the Single Audit Act of 1984.

b. It shall make available to the Secretary and the Comptroller General of the United States, or any of their duly authorized representatives, for the purpose of audit and examination, any books, documents, papers, and records of the recipient that are pertinent to this Grant. The Secretary may require that an appropriate audit be conducted by a recipient. In any case in which an independent audit is made of the accounts of a sponsor relating to the disposition of the proceeds of a grant or relating to the project in connection with which this Grant was given or used, it shall file a certified copy of such audit with the Comptroller General of the United States not later than six (6) months following the close of the fiscal year for which the audit was made.

14. Minimum Wage Rates.

It shall include, in all contracts in excess of $2,000 for work on any projects funded under this Grant Agreement which involve labor, provisions establishing minimum rates of wages, to be predetermined by the Secretary of Labor under 40 U.S.C. §§ 3141-3144, 3146, and 3147, Public Building, Property, and Works), which contractors shall pay to skilled and unskilled labor, and such minimum rates shall be stated in the invitation for bids and shall be included in proposals or bids for the work.

15. Veteran's Preference.

It shall include in all contracts for work on any project funded under this Grant Agreement which involve labor, such provisions as are necessary to insure that, in the employment of labor (except in executive, administrative, and supervisory positions), preference shall be given to Vietnam era veterans, Persian Gulf veterans, Afghanistan-Iraq war veterans, disabled veterans, and small business concerns owned and controlled by disabled veterans as defined in 49 U.S.C. § 47112. However, this preference shall apply only where the individuals are available and qualified to perform the work to which the employment relates.

16. Conformity to Plans and Specifications.

It will execute the project subject to plans, specifications, and schedules approved by the Secretary. Such plans, specifications, and schedules shall be submitted to the Secretary prior to commencement of site preparation, construction, or other performance under this Grant Agreement, and, upon approval of the Secretary, shall be incorporated into this Grant Agreement. Any modification to the approved plans, specifications, and schedules shall also be subject to approval of the Secretary, and incorporated into this Grant Agreement.

17. Construction Inspection and Approval.

It will provide and maintain competent technical supervision at the construction site throughout the project to assure that the work conforms to the plans, specifications, and schedules approved by the Secretary for the project. It shall subject the construction work on any project contained in an approved project application to inspection and approval by the Secretary and such work shall be in accordance with regulations and procedures prescribed by the Secretary. Such regulations and procedures shall require such cost and progress reporting by the sponsor or sponsors of such project as the Secretary shall deem necessary.

18. Planning Projects.

In carrying out planning projects:

a. It will execute the project in accordance with the approved program narrative contained in the project application or with the modifications similarly approved.

b. It will furnish the Secretary with such periodic reports as required pertaining to the planning project and planning work activities.

c. It will include in all published material prepared in connection with the planning project a notice that the material was prepared under a grant provided by the United States.

d. It will make such material available for examination by the public, and agrees that no material prepared with funds under this project shall be subject to copyright in the United States or any other country.

e. It will give the Secretary unrestricted authority to publish, disclose, distribute, and otherwise use any of the material prepared in connection with this grant.

f. It will grant the Secretary the right to disapprove the sponsor's employment of specific consultants and their subcontractors to do all or any part of this project as well as the right to disapprove the proposed scope and cost of professional services.

g. It will grant the Secretary the right to disapprove the use of the sponsor's employees to do all or any part of the project.

h. It understands and agrees that the Secretary's approval of this project grant or the Secretary's approval of any planning material developed as part of this grant does not constitute or imply any assurance or commitment on the part of the Secretary to approve any pending or future application for a Federal airport grant.

19. Operation and Maintenance.

a. The airport and all facilities which are necessary to serve the aeronautical users of the airport, other than facilities owned or controlled by the United States, shall be operated at all times in a safe and serviceable condition and in accordance with the minimum standards as may be required or prescribed by applicable Federal, state, and local agencies for maintenance and operation. It will not cause or permit any activity or action thereon which would interfere with its use for airport purposes. It will suitably operate and maintain the airport and all facilities thereon or connected therewith, with due regard to climatic and flood conditions. Any proposal to temporarily close the airport for non-aeronautical purposes must first be approved by the Secretary. In furtherance of this assurance, the sponsor will have in effect arrangements for:

   1. Operating the airport's aeronautical facilities whenever required;

   2. Promptly marking and lighting hazards resulting from airport conditions, including temporary conditions; and

   3. Promptly notifying pilots of any condition affecting aeronautical use of the airport. Nothing contained herein shall be construed to require that the airport be operated for aeronautical use during temporary periods when snow, flood, or other climatic conditions interfere with such operation and maintenance. Further, nothing herein shall be construed as requiring the maintenance, repair, restoration, or replacement of any structure or

facility which is substantially damaged or destroyed due to an act of God or other condition or circumstance beyond the control of the sponsor.

b. It will suitably operate and maintain noise compatibility program items that it owns or controls upon which Federal funds have been expended.

20. Hazard Removal and Mitigation.

It will take appropriate action to assure that such terminal airspace as is required to protect instrument and visual operations to the airport (including established minimum flight altitudes) will be adequately cleared and protected by removing, lowering, relocating, marking, or lighting or otherwise mitigating existing airport hazards and by preventing the establishment or creation of future airport hazards.

21. Compatible Land Use.

It will take appropriate action, to the extent reasonable, including the adoption of zoning laws, to restrict the use of land adjacent to or in the immediate vicinity of the airport to activities and purposes compatible with normal airport operations, including landing and takeoff of aircraft. In addition, if the project is for noise compatibility program implementation, it will not cause or permit any change in land use, within its jurisdiction, that will reduce its compatibility, with respect to the airport, of the noise compatibility program measures upon which Federal funds have been expended.

22. Economic Nondiscrimination.

a. It will make the airport available as an airport for public use on reasonable terms and without unjust discrimination to all types, kinds and classes of aeronautical activities, including commercial aeronautical activities offering services to the public at the airport.

b. In any agreement, contract, lease, or other arrangement under which a right or privilege at the airport is granted to any person, firm, or corporation to conduct or to engage in any aeronautical activity for furnishing services to the public at the airport, the sponsor will insert and enforce provisions requiring the contractor to:

   1. Furnish said services on a reasonable, and not unjustly discriminatory, basis to all users thereof, and

   2. Charge reasonable, and not unjustly discriminatory, prices for each unit or service, provided that the contractor may be allowed to make reasonable and nondiscriminatory discounts, rebates, or other similar types of price reductions to volume purchasers.

c. Each fixed-based operator at the airport shall be subject to the same rates, fees, rentals, and other charges as are uniformly applicable to all other fixed-based operators making the same or similar uses of such airport and utilizing the same or similar facilities.

d. Each air carrier using such airport shall have the right to service itself or to use any fixed-based operator that is authorized or permitted by the airport to serve any air carrier at such airport.

e. Each air carrier using such airport (whether as a tenant, non-tenant, or subtenant of another air carrier tenant) shall be subject to such nondiscriminatory and substantially comparable rules, regulations, conditions, rates, fees, rentals, and other charges with respect to facilities directly and substantially related to providing air transportation as are applicable to all such air carriers which make similar use of such airport and utilize similar facilities, subject to reasonable

classifications such as tenants or non-tenants and signatory carriers and non-signatory carriers. Classification or status as tenant or signatory shall not be unreasonably withheld by any airport provided an air carrier assumes obligations substantially similar to those already imposed on air carriers in such classification or status.

f. It will not exercise or grant any right or privilege which operates to prevent any person, firm, or corporation operating aircraft on the airport from performing any services on its own aircraft with its own employees (including, but not limited to maintenance, repair, and fueling) that it may choose to perform.

g. In the event the sponsor itself exercises any of the rights and privileges referred to in this assurance, the services involved will be provided on the same conditions as would apply to the furnishing of such services by commercial aeronautical service providers authorized by the sponsor under these provisions.

h. The sponsor may establish such reasonable, and not unjustly discriminatory, conditions to be met by all users of the airport as may be necessary for the safe and efficient operation of the airport.

i. The sponsor may prohibit or limit any given type, kind or class of aeronautical use of the airport if such action is necessary for the safe operation of the airport or necessary to serve the civil aviation needs of the public.

23. Exclusive Rights.

It will permit no exclusive right for the use of the airport by any person providing, or intending to provide, aeronautical services to the public. For purposes of this paragraph, the providing of the services at an airport by a single fixed-based operator shall not be construed as an exclusive right if both of the following apply:

a. It would be unreasonably costly, burdensome, or impractical for more than one fixed-based operator to provide such services, and

b. If allowing more than one fixed-based operator to provide such services would require the reduction of space leased pursuant to an existing agreement between such single fixed-based operator and such airport. It further agrees that it will not, either directly or indirectly, grant or permit any person, firm, or corporation, the exclusive right at the airport to conduct any aeronautical activities, including, but not limited to charter flights, pilot training, aircraft rental and sightseeing, aerial photography, crop dusting, aerial advertising and surveying, air carrier operations, aircraft sales and services, sale of aviation petroleum products whether or not conducted in conjunction with other aeronautical activity, repair and maintenance of aircraft, sale of aircraft parts, and any other activities which because of their direct relationship to the operation of aircraft can be regarded as an aeronautical activity, and that it will terminate any exclusive right to conduct an aeronautical activity now existing at such an airport before the grant of any assistance under Title 49, United States Code.

24. Fee and Rental Structure.

It will maintain a fee and rental structure for the facilities and services at the airport which will make the airport as self-sustaining as possible under the circumstances existing at the particular airport, taking into account such factors as the volume of traffic and economy of collection. No part of the Federal share of an airport development, airport planning or noise compatibility project for

which a Grant is made under Title 49, United States Code, the Airport and Airway Improvement Act of 1982, the Federal Airport Act or the Airport and Airway Development Act of 1970 shall be included in the rate basis in establishing fees, rates, and charges for users of that airport.

25. Airport Revenues.

a. All revenues generated by the airport and any local taxes on aviation fuel established after December 30, 1987, will be expended by it for the capital or operating costs of the airport; the local airport system; or other local facilities which are owned or operated by the owner or operator of the airport and which are directly and substantially related to the actual air transportation of passengers or property; or for noise mitigation purposes on or off the airport. The following exceptions apply to this paragraph:

   1. If covenants or assurances in debt obligations issued before September 3, 1982, by the owner or operator of the airport, or provisions enacted before September 3, 1982, in governing statutes controlling the owner or operator's financing, provide for the use of the revenues from any of the airport owner or operator's facilities, including the airport, to support not only the airport but also the airport owner or operator's general debt obligations or other facilities, then this limitation on the use of all revenues generated by the airport (and, in the case of a public airport, local taxes on aviation fuel) shall not apply.

   2. If the Secretary approves the sale of a privately owned airport to a public sponsor and provides funding for any portion of the public sponsor’s acquisition of land, this limitation on the use of all revenues generated by the sale shall not apply to certain proceeds from the sale. This is conditioned on repayment to the Secretary by the private owner of an amount equal to the remaining unamortized portion (amortized over a 20-year period) of any airport improvement grant made to the private owner for any purpose other than land acquisition on or after October 1, 1996, plus an amount equal to the federal share of the current fair market value of any land acquired with an airport improvement grant made to that airport on or after October 1, 1996.

   3. Certain revenue derived from or generated by mineral extraction, production, lease, or other means at a general aviation airport (as defined at 49 U.S.C. § 47102), if the FAA determines the airport sponsor meets the requirements set forth in Section 813 of Public Law 112-95.

b. As part of the annual audit required under the Single Audit Act of 1984, the sponsor will direct that the audit will review, and the resulting audit report will provide an opinion concerning, the use of airport revenue and taxes in paragraph (a), and indicating whether funds paid or transferred to the owner or operator are paid or transferred in a manner consistent with Title 49, United States Code and any other applicable provision of law, including any regulation promulgated by the Secretary or Administrator.

c. Any civil penalties or other sanctions will be imposed for violation of this assurance in accordance with the provisions of 49 U.S.C. § 47107.

26. Reports and Inspections.

It will:

a. submit to the Secretary such annual or special financial and operations reports as the Secretary may reasonably request and make such reports available to the public; make available to the

public at reasonable times and places a report of the airport budget in a format prescribed by the Secretary;

b. for airport development projects, make the airport and all airport records and documents affecting the airport, including deeds, leases, operation and use agreements, regulations and other instruments, available for inspection by any duly authorized agent of the Secretary upon reasonable request;

c. for noise compatibility program projects, make records and documents relating to the project and continued compliance with the terms, conditions, and assurances of this Grant Agreement including deeds, leases, agreements, regulations, and other instruments, available for inspection by any duly authorized agent of the Secretary upon reasonable request; and

d. in a format and time prescribed by the Secretary, provide to the Secretary and make available to the public following each of its fiscal years, an annual report listing in detail:

    1. all amounts paid by the airport to any other unit of government and the purposes for which each such payment was made; and

    2. all services and property provided by the airport to other units of government and the amount of compensation received for provision of each such service and property.

27. Use by Government Aircraft.

It will make available all of the facilities of the airport developed with Federal financial assistance and all those usable for landing and takeoff of aircraft to the United States for use by Government aircraft in common with other aircraft at all times without charge, except, if the use by Government aircraft is substantial, charge may be made for a reasonable share, proportional to such use, for the cost of operating and maintaining the facilities used. Unless otherwise determined by the Secretary, or otherwise agreed to by the sponsor and the using agency, substantial use of an airport by Government aircraft will be considered to exist when operations of such aircraft are in excess of those which, in the opinion of the Secretary, would unduly interfere with use of the landing areas by other authorized aircraft, or during any calendar month that:

a. Five (5) or more Government aircraft are regularly based at the airport or on land adjacent thereto; or

b. The total number of movements (counting each landing as a movement) of Government aircraft is 300 or more, or the gross accumulative weight of Government aircraft using the airport (the total movement of Government aircraft multiplied by gross weights of such aircraft) is in excess of five million pounds.

28. Land for Federal Facilities.

It will furnish without cost to the Federal Government for use in connection with any air traffic control or air navigation activities, or weather-reporting and communication activities related to air traffic control, any areas of land or water, or estate therein as the Secretary considers necessary or desirable for construction, operation, and maintenance at Federal expense of space or facilities for such purposes. Such areas or any portion thereof will be made available as provided herein within four months after receipt of a written request from the Secretary.

29. Airport Layout Plan.

a. Subject to the FAA Reauthorization Act of 2018, Public Law 115-254, Section 163, it will keep up to date at all times an airport layout plan of the airport showing:

1. boundaries of the airport and all proposed additions thereto, together with the boundaries of all offsite areas owned or controlled by the sponsor for airport purposes and proposed additions thereto;
2. the location and nature of all existing and proposed airport facilities and structures (such as runways, taxiways, aprons, terminal buildings, hangars and roads), including all proposed extensions and reductions of existing airport facilities;
3. the location of all existing and proposed non-aviation areas and of all existing improvements thereon; and
4. all proposed and existing access points used to taxi aircraft across the airport's property boundary.

Such airport layout plans and each amendment, revision, or modification thereof, shall be subject to the approval of the Secretary which approval shall be evidenced by the signature of a duly authorized representative of the Secretary on the face of the airport layout plan. The sponsor will not make or permit any changes or alterations in the airport or any of its facilities which are not in conformity with the airport layout plan as approved by the Secretary and which might, in the opinion of the Secretary, adversely affect the safety, utility or efficiency of the airport.

b. Subject to the FAA Reauthorization Act of 2018, Public Law 115-254, Section 163, if a change or alteration in the airport or the facilities is made which the Secretary determines adversely affects the safety, utility, or efficiency of any federally owned, leased, or funded property on or off the airport and which is not in conformity with the airport layout plan as approved by the Secretary, the owner or operator will, if requested, by the Secretary:

1. eliminate such adverse effect in a manner approved by the Secretary; or
2. bear all costs of relocating such property (or replacement thereof) to a site acceptable to the Secretary and all costs of restoring such property (or replacement thereof) to the level of safety, utility, efficiency, and cost of operation existing before the unapproved change in the airport or its facilities except in the case of a relocation or replacement of an existing airport facility due to a change in the Secretary's design standards beyond the control of the airport sponsor.

30. Civil Rights.

It will promptly take any measures necessary to ensure that no person in the United States shall, on the grounds of race, color, and national origin (including limited English proficiency) in accordance with the provisions of Title VI of the Civil Rights Act of 1964 (78 Stat. 252, 42 U.S.C. §§ 2000d to 2000d-4); creed and sex (including sexual orientation and gender identity) per 49 U.S.C. § 47123 and related requirements; age per the Age Discrimination Act of 1975 and related requirements; or disability per the Americans with Disabilities Act of 1990 and related requirements, be excluded from participation in, be denied the benefits of, or be otherwise subjected to discrimination in any program and activity conducted with, or benefiting from, funds received from this Grant.

a. Using the definitions of activity, facility, and program as found and defined in 49 CFR § § 21.23(b) and 21.23(e), the sponsor will facilitate all programs, operate all facilities, or conduct all programs in compliance with all non-discrimination requirements imposed by or pursuant to these assurances.

b. Applicability

   1. Programs and Activities. If the sponsor has received a grant (or other federal assistance) for any of the sponsor's program or activities, these requirements extend to all of the sponsor's programs and activities.

   2. Facilities. Where it receives a grant or other federal financial assistance to construct, expand, renovate, remodel, alter, or acquire a facility, or part of a facility, the assurance extends to the entire facility and facilities operated in connection therewith.

   3. Real Property. Where the sponsor receives a grant or other Federal financial assistance in the form of, or for the acquisition of real property or an interest in real property, the assurance will extend to rights to space on, over, or under such property.

c. Duration.
   The sponsor agrees that it is obligated to this assurance for the period during which Federal financial assistance is extended to the program, except where the Federal financial assistance is to provide, or is in the form of, personal property, or real property, or interest therein, or structures or improvements thereon, in which case the assurance obligates the sponsor, or any transferee for the longer of the following periods:

   1. So long as the airport is used as an airport, or for another purpose involving the provision of similar services or benefits; or

   2. So long as the sponsor retains ownership or possession of the property.

d. Required Solicitation Language. It will include the following notification in all solicitations for bids, Requests For Proposals for work, or material under this Grant Agreement and in all proposals for agreements, including airport concessions, regardless of funding source:
   "The **Hurricane City** in accordance with the provisions of Title VI of the Civil Rights Act of 1964 (78 Stat. 252, 42 U.S.C. §§ 2000d to 2000d-4) and the Regulations, hereby notifies all bidders or offerors that it will affirmatively ensure that for any contract entered into pursuant to this advertisement, [select businesses, or disadvantaged business enterprises or airport concession disadvantaged business enterprises] will be afforded full and fair opportunity to submit bids in response to this invitation and no businesses will be discriminated against on the grounds of race, color, national origin (including limited English proficiency), creed, sex (including sexual orientation and gender identity), age, or disability in consideration for an award."

e. Required Contract Provisions.

   1. It will insert the non-discrimination contract clauses requiring compliance with the acts and regulations relative to non-discrimination in Federally-assisted programs of the Department of Transportation (DOT), and incorporating the acts and regulations into the contracts by reference in every contract or agreement subject to the non-discrimination in Federally-assisted programs of the DOT acts and regulations.

2. It will include a list of the pertinent non-discrimination authorities in every contract that is subject to the non-discrimination acts and regulations.
3. It will insert non-discrimination contract clauses as a covenant running with the land, in any deed from the United States effecting or recording a transfer of real property, structures, use, or improvements thereon or interest therein to a sponsor.
4. It will insert non-discrimination contract clauses prohibiting discrimination on the basis of race, color, national origin (including limited English proficiency), creed, sex (including sexual orientation and gender identity), age, or disability as a covenant running with the land, in any future deeds, leases, license, permits, or similar instruments entered into by the sponsor with other parties:
    a. For the subsequent transfer of real property acquired or improved under the applicable activity, project, or program; and
    b. For the construction or use of, or access to, space on, over, or under real property acquired or improved under the applicable activity, project, or program.

f. It will provide for such methods of administration for the program as are found by the Secretary to give reasonable guarantee that it, other recipients, sub-recipients, sub-grantees, contractors, subcontractors, consultants, transferees, successors in interest, and other participants of Federal financial assistance under such program will comply with all requirements imposed or pursuant to the acts, the regulations, and this assurance.

g. It agrees that the United States has a right to seek judicial enforcement with regard to any matter arising under the acts, the regulations, and this assurance.

31. Disposal of Land.

a. For land purchased under a grant for airport noise compatibility purposes, including land serving as a noise buffer, it will dispose of the land, when the land is no longer needed for such purposes, at fair market value, at the earliest practicable time. That portion of the proceeds of such disposition which is proportionate to the United States' share of acquisition of such land will be, at the discretion of the Secretary, (1) reinvested in another project at the airport, or (2) transferred to another eligible airport as prescribed by the Secretary. The Secretary shall give preference to the following, in descending order:
    1. Reinvestment in an approved noise compatibility project;
    2. Reinvestment in an approved project that is eligible for grant funding under 49 U.S.C. § 47117(e);
    3. Reinvestment in an approved airport development project that is eligible for grant funding under 49 U.S.C. §§ 47114, 47115, or 47117;
    4. Transfer to an eligible sponsor of another public airport to be reinvested in an approved noise compatibility project at that airport; or
    5. Payment to the Secretary for deposit in the Airport and Airway Trust Fund.

    If land acquired under a grant for noise compatibility purposes is leased at fair market value and consistent with noise buffering purposes, the lease will not be considered a disposal of the land. Revenues derived from such a lease may be used for an approved airport development

project that would otherwise be eligible for grant funding or any permitted use of airport revenue.

b. For land purchased under a grant for airport development purposes (other than noise compatibility), it will, when the land is no longer needed for airport purposes, dispose of such land at fair market value or make available to the Secretary an amount equal to the United States' proportionate share of the fair market value of the land. That portion of the proceeds of such disposition which is proportionate to the United States' share of the cost of acquisition of such land will, upon application to the Secretary, be reinvested or transferred to another eligible airport as prescribed by the Secretary. The Secretary shall give preference to the following, in descending order:

   1. Reinvestment in an approved noise compatibility project;
   2. Reinvestment in an approved project that is eligible for grant funding under 49 U.S.C. § 47117(e);
   3. Reinvestment in an approved airport development project that is eligible for grant funding under 49 U.S.C. §§ 47114, 47115, or 47117;
   4. Transfer to an eligible sponsor of another public airport to be reinvested in an approved noise compatibility project at that airport; or
   5. Payment to the Secretary for deposit in the Airport and Airway Trust Fund.

c. Land shall be considered to be needed for airport purposes under this assurance if (1) it may be needed for aeronautical purposes (including runway protection zones) or serve as noise buffer land, and (2) the revenue from interim uses of such land contributes to the financial self-sufficiency of the airport. Further, land purchased with a grant received by an airport operator or owner before December 31, 1987, will be considered to be needed for airport purposes if the Secretary or Federal agency making such grant before December 31, 1987, was notified by the operator or owner of the uses of such land, did not object to such use, and the land continues to be used for that purpose, such use having commenced no later than December 15, 1989.

d. Disposition of such land under (a), (b), or (c) will be subject to the retention or reservation of any interest or right therein necessary to ensure that such land will only be used for purposes which are compatible with noise levels associated with operation of the airport.

32. Engineering and Design Services.

If any phase of such project has received Federal funds under Chapter 471 subchapter 1 of Title 49 U.S.C., it will award each contract, or sub-contract for program management, construction management, planning studies, feasibility studies, architectural services, preliminary engineering, design, engineering, surveying, mapping or related services in the same manner as a contract for architectural and engineering services is negotiated under Chapter 11 of Title 40 U S.C., or an equivalent qualifications-based requirement prescribed for or by the sponsor of the airport.

33. Foreign Market Restrictions.

It will not allow funds provided under this Grant to be used to fund any project which uses any product or service of a foreign country during the period in which such foreign country is listed by

the United States Trade Representative as denying fair and equitable market opportunities for products and suppliers of the United States in procurement and construction.

34. Policies, Standards, and Specifications.

It will carry out any project funded under an Airport Improvement Program Grant in accordance with policies, standards, and specifications approved by the Secretary including, but not limited to, current FAA Advisory Circulars (https://www.faa.gov/airports/aip/media/aip-pfc-checklist.pdf) for AIP projects as of [Selection Criteria: Project Application Date].

35. Relocation and Real Property Acquisition.

a. It will be guided in acquiring real property, to the greatest extent practicable under State law, by the land acquisition policies in Subpart B of 49 CFR Part 24 and will pay or reimburse property owners for necessary expenses as specified in Subpart B.

b. It will provide a relocation assistance program offering the services described in Subpart C of 49 CFR Part 24 and fair and reasonable relocation payments and assistance to displaced persons as required in Subpart D and E of 49 CFR Part 24.

c. It will make available within a reasonable period of time prior to displacement, comparable replacement dwellings to displaced persons in accordance with Subpart E of 49 CFR Part 24.

36. Access By Intercity Buses.

The airport owner or operator will permit, to the maximum extent practicable, intercity buses or other modes of transportation to have access to the airport; however, it has no obligation to fund special facilities for intercity buses or for other modes of transportation.

37. Disadvantaged Business Enterprises.

The sponsor shall not discriminate on the basis of race, color, national origin, or sex, in the award and performance of any DOT-assisted contract covered by 49 CFR Part 26, or in the award and performance of any concession activity contract covered by 49 CFR Part 23. In addition, the sponsor shall not discriminate on the basis of race, color, national origin or sex in the administration of its Disadvantaged Business Enterprise (DBE) and Airport Concessions Disadvantaged Business Enterprise (ACDBE) programs or the requirements of 49 CFR Parts 23 and 26. The sponsor shall take all necessary and reasonable steps under 49 CFR Parts 23 and 26 to ensure nondiscrimination in the award and administration of DOT-assisted contracts, and/or concession contracts. The sponsor's DBE and ACDBE programs, as required by 49 CFR Parts 26 and 23, and as approved by DOT, are incorporated by reference in this agreement. Implementation of these programs is a legal obligation and failure to carry out its terms shall be treated as a violation of this agreement. Upon notification to the sponsor of its failure to carry out its approved program, the Department may impose sanctions as provided for under Parts 26 and 23 and may, in appropriate cases, refer the matter for enforcement under 18 U.S.C. § 1001 and/or the Program Fraud Civil Remedies Act of 1986 (31 U.S.C. §§ 3801-3809, 3812).

38. Hangar Construction.

If the airport owner or operator and a person who owns an aircraft agree that a hangar is to be constructed at the airport for the aircraft at the aircraft owner's expense, the airport owner or operator will grant to the aircraft owner for the hangar a long term lease that is subject to such terms and conditions on the hangar as the airport owner or operator may impose.

39. Competitive Access.

a. If the airport owner or operator of a medium or large hub airport (as defined in 49 U.S.C. § 47102) has been unable to accommodate one or more requests by an air carrier for access to gates or other facilities at that airport in order to allow the air carrier to provide service to the airport or to expand service at the airport, the airport owner or operator shall transmit a report to the Secretary that:

   1. Describes the requests;
   2. Provides an explanation as to why the requests could not be accommodated; and
   3. Provides a time frame within which, if any, the airport will be able to accommodate the requests.

b. Such report shall be due on either February 1 or August 1 of each year if the airport has been unable to accommodate the request(s) in the six month period prior to the applicable due date.

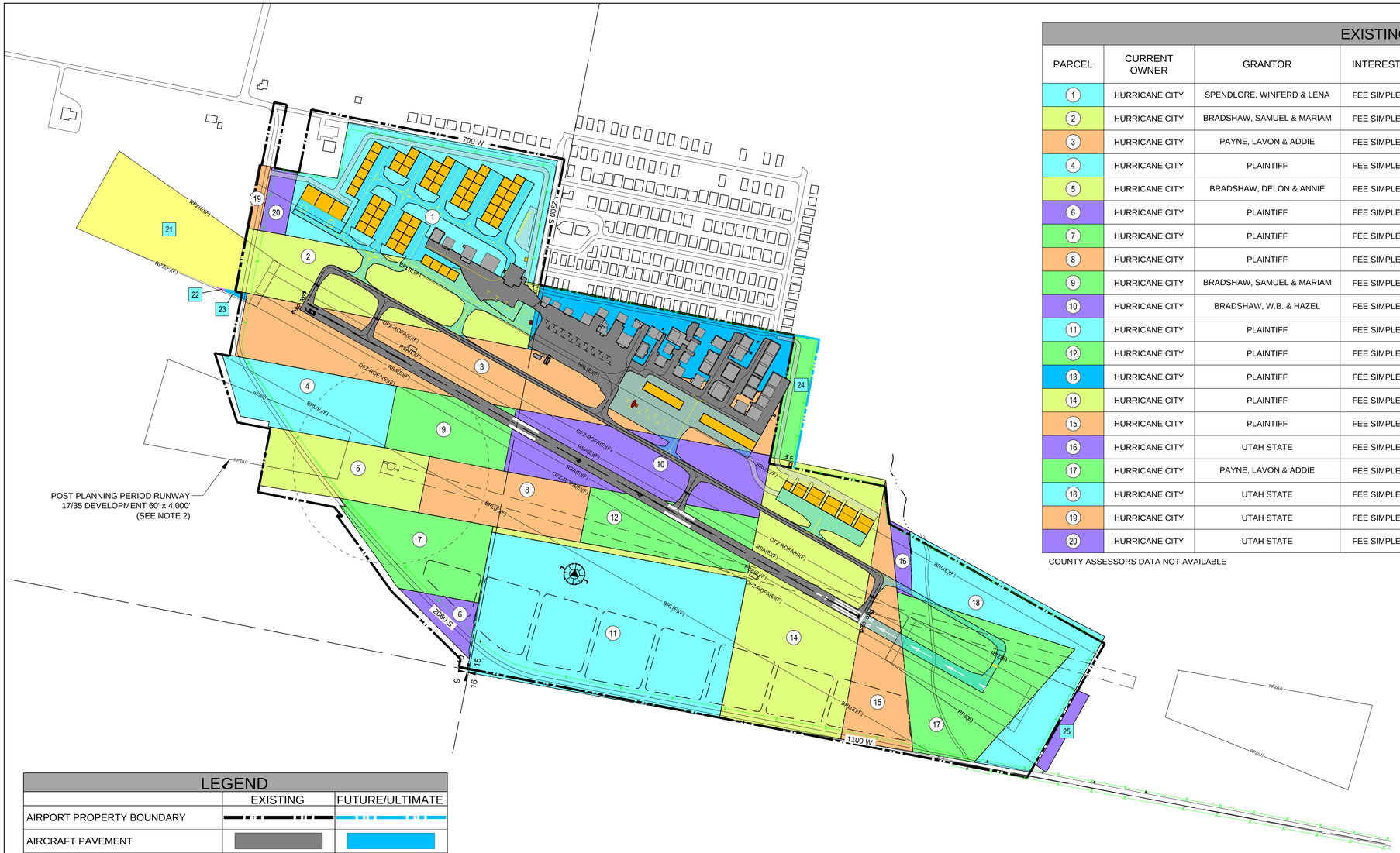

EXISTING AIRPORT PROPERTY

PARCEL	CURRENT OWNER	GRANTOR	INTEREST	LOCATION	I.D.	DATE	ACREAGE	PURPOSE	FEDERAL PARTICIPATION
1	HURRICANE CITY	SPENDLORE, WINFERD & LENA	FEE SIMPLE	SEC. 10 T42S R13W	243/544	11/17/78	18.7	AERONAUTICAL	NONE
2	HURRICANE CITY	BRADSHAW, SAMUEL & MARIAM	FEE SIMPLE	SEC. 10 T42S R13W	U-11/66	11/15/46	11.6	AERONAUTICAL	NONE
3	HURRICANE CITY	PAYNE, LAVON & ADDIE	FEE SIMPLE	SEC. 10 T42S R13W	U-11/264	1/26/48	20.2	AERONAUTICAL	NONE
4	HURRICANE CITY	PLAINTIFF	FEE SIMPLE	SEC. 10 T42S R13W	U-11/358	10/27/48	6.0	AERONAUTICAL	NONE
5	HURRICANE CITY	BRADSHAW, DELON & ANNIE	FEE SIMPLE	SEC. 10 T42S R13W	U-11/167	6/18/47	5.7	AERONAUTICAL	NONE
6	HURRICANE CITY	PLAINTIFF	FEE SIMPLE	SEC. 10 T42S R13W	U-11/358	10/27/48	1.3	AERONAUTICAL	NONE
7	HURRICANE CITY	PLAINTIFF	FEE SIMPLE	SEC. 10 T42S R13W	U-11/358	10/27/48	5.7	AERONAUTICAL	NONE
8	HURRICANE CITY	PLAINTIFF	FEE SIMPLE	SEC. 10 T42S R13W	U-11/358	10/27/48	5.6	AERONAUTICAL	NONE
9	HURRICANE CITY	BRADSHAW, SAMUEL & MARIAM	FEE SIMPLE	SEC. 10 T42S R13W	U-11/117	2/25/47	4.6	AERONAUTICAL	NONE
10	HURRICANE CITY	BRADSHAW, W.B. & HAZEL	FEE SIMPLE	SEC. 10 T42S R13W	U-11/118	2/25/47	9.9	AERONAUTICAL	NONE
11	HURRICANE CITY	PLAINTIFF	FEE SIMPLE	SEC. 10 T42S R13W	U-11/358	10/27/48	21.9	AERONAUTICAL	NONE
12	HURRICANE CITY	PLAINTIFF	FEE SIMPLE	SEC. 10 T42S R13W	U-11/358	10/27/48	5.7	AERONAUTICAL	NONE
13	HURRICANE CITY	PLAINTIFF	FEE SIMPLE	SEC. 10 T42S R13W	U-11/358	10/27/48	9.8	AERONAUTICAL	NONE
14	HURRICANE CITY	PLAINTIFF	FEE SIMPLE	SEC. 10 T42S R13W	U-11/358	10/27/48	20.0	AERONAUTICAL	NONE
15	HURRICANE CITY	PLAINTIFF	FEE SIMPLE	SEC. 10 T42S R13W	U-11/358	10/27/48	5.8	AERONAUTICAL	NONE
16	HURRICANE CITY	UTAH STATE	FEE SIMPLE	SEC. 10 T42S R13W	0717093	1/4/11	0.7	AERONAUTICAL	NONE
17	HURRICANE CITY	PAYNE, LAVON & ADDIE	FEE SIMPLE	SEC. 10 T42S R13W	U-11/236	3/5/53	10.6	AERONAUTICAL	NONE
18	HURRICANE CITY	UTAH STATE	FEE SIMPLE	SEC. 10 T42S R13W	0703432	1/4/11	7.9	AERONAUTICAL	NONE
19	HURRICANE CITY	UTAH STATE	FEE SIMPLE	SEC. 10 T42S R13W	0795192	1/4/11	0.5	AERONAUTICAL	NONE
20	HURRICANE CITY	UTAH STATE	FEE SIMPLE	SEC. 10 T42S R13W	0795192	1/4/11	1.0	AERONAUTICAL	NONE

COUNTY ASSESSORS DATA NOT AVAILABLE

PROPERTY TO BE ACQUIRED

PARCEL	INTEREST	ACREAGE	PURPOSE
21	AVIGATION EASEMENT	7.00	APPROACH PROTECTION
22	AVIGATION EASEMENT	0.01	APPROACH PROTECTION
23	AVIGATION EASEMENT	0.06	APPROACH PROTECTION
24	FEE SIMPLE	1.88	LANDSIDE ACCESS IMPROVEMENT
25	AVIGATION EASEMENT	0.63	APPROACH PROTECTION

LEGEND

	EXISTING	FUTURE/ULTIMATE
AIRPORT PROPERTY BOUNDARY		
AIRCRAFT PAVEMENT		
AIRPORT PAVEMENT MARKINGS		
ROAD (PAVED/GRAVEL)		
TO BE REMOVED	N/A	
BUILDING/HANGAR		
RUNWAY PROTECTION ZONE (RPZ)	RPZ2(E) RPZ2(E)	RPZ2(F) RPZ2(F)
BUILDING RESTRICTION LINE (25')	BRL(E)	BRL(F)
RUNWAY OBJECT FREE AREA (ROFA)	ROFA(E)	ROFA(F)
RUNWAY SAFETY AREA (RSA)	RSA(E)	RSA(F)
RUNWAY OBJECT FREE ZONE (ROFZ)	OFZ(E)	OFZ(F)
FENCE (8' HEIGHT OR LESS)		N/A
ROTATING BEACON	N/A	
PAPI	N/A	
WINDCONE/SEGMENTED CIRCLE		SAME
AIRPORT REFERENCE POINT		
THRESHOLD LIGHTS	N/A	0000 0000
REILS	N/A	

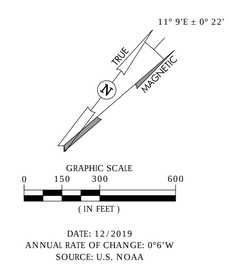

NOTES:

1. ALL PROPERTY INFORMATION AND DETAIL WAS TAKEN FROM THE PREVIOUS EXHIBIT 'A' PREPARED BY R.W. ARMSTRONG IN NOVEMBER OF 2012
2. POST PLANNING RUNWAY 17/35 DEPICTED AS PREFERRED LONG-TERM RUNWAY REALIGNMENT OPTION IN ORDER TO PROTECT AND PLAN FUTURE LANDSIDE DEVELOPMENT.

L:\11L8\ALP UPDATED 2019\PLANS\
14-11L8-ALP-EXHA-EXHA.dwg
Feb 03, 2020 - 8:18am
Sean.Jones

JVIATION®

GENERAL DICK STOUT FIELD
HURRICANE, UTAH

DES: S.G.J.
DR: S.G.J.
CH: T.G.D.
APP: T.G.D.

ISSUE RECORD

NO.	BY	DATE	DESCRIPTION
1	S.G.J.	DEC 2019	AS-BUILTS WITH FUTURE EDITS

AIRPORT LAYOUT PLAN

EXHIBIT 'A' MAP

AIP PROJ. NO.	JVIATION PROJ. NO.	DATE:
3-49-0012-007-2018	2018.1L8.02	FEBRUARY 2020

SHEET NO.
16 of 16

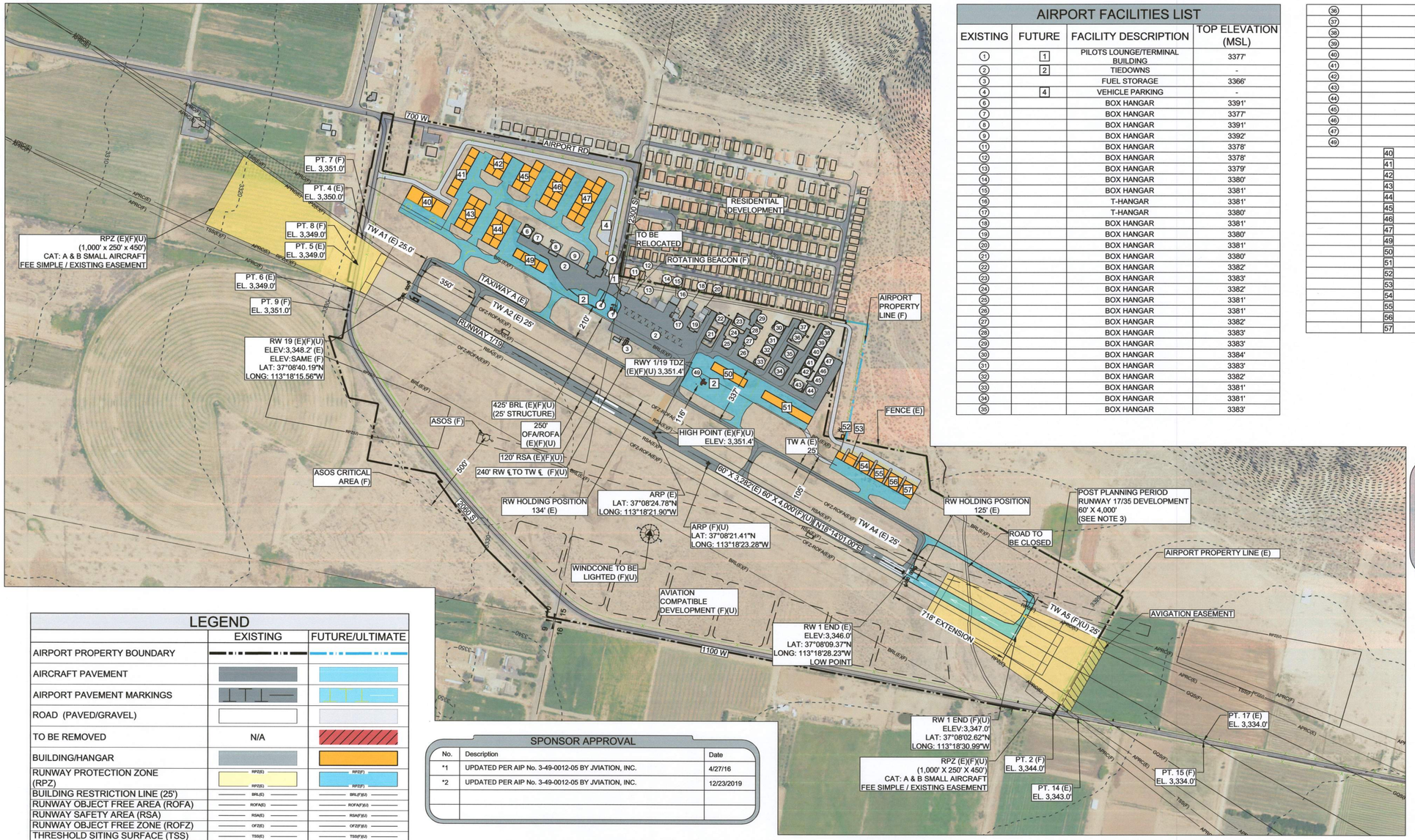

AIRPORT FACILITIES LIST

EXISTING	FUTURE	FACILITY DESCRIPTION	TOP ELEVATION (MSL)
1	1	PILOTS LOUNGE/TERMINAL BUILDING	3377'
2	2	TIEDOWNS	-
3		FUEL STORAGE	3366'
4	4	VEHICLE PARKING	-
6		BOX HANGAR	3391'
7		BOX HANGAR	3377'
8		BOX HANGAR	3391'
9		BOX HANGAR	3392'
11		BOX HANGAR	3378'
12		BOX HANGAR	3378'
13		BOX HANGAR	3379'
14		BOX HANGAR	3380'
15		BOX HANGAR	3381'
16		T-HANGAR	3381'
17		T-HANGAR	3380'
18		BOX HANGAR	3381'
19		BOX HANGAR	3380'
20		BOX HANGAR	3381'
21		BOX HANGAR	3380'
22		BOX HANGAR	3382'
23		BOX HANGAR	3383'
24		BOX HANGAR	3382'
25		BOX HANGAR	3381'
26		BOX HANGAR	3381'
27		BOX HANGAR	3382'
28		BOX HANGAR	3383'
29		BOX HANGAR	3383'
30		BOX HANGAR	3384'
31		BOX HANGAR	3383'
32		BOX HANGAR	3382'
33		BOX HANGAR	3381'
34		BOX HANGAR	3381'
35		BOX HANGAR	3383'
36		BOX HANGAR	3383'
37		BOX HANGAR	3384'
38		BOX HANGAR	3385'
39		BOX HANGAR	3385'
40		BOX HANGAR	3384'
41		BOX HANGAR	3383'
42		BOX HANGAR	3382'
43		BOX HANGAR	3382'
44		BOX HANGAR	3382'
45		BOX HANGAR	3382'
46		BOX HANGAR	3383'
47		BOX HANGAR	3383'
49		T-HANGAR	TO BE REMOVED
	40	BOX HANGAR (80' x 80')	3385'
	41	BOX HANGAR (50' x 50')	3370'-3371'
	42	BOX HANGAR (50' x 50')	3362'-3363'
	43	BOX HANGAR (50' x 50')	3361'-3362'
	44	BOX HANGAR (50' x 50')	3361'-3362'
	45	BOX HANGAR (50' x 50')	3364'-3365'
	46	BOX HANGAR (50' x 50')	3366'-3367'
	47	BOX HANGAR (50' x 50')	3364'
	49	BOX HANGAR (50' x 50')	3368'
	50	SHADE/T-HANGARS	3390'
	51	SHADE/T-HANGARS	3389'
	52	BOX HANGAR (40' x 40')	3372'
	53	BOX HANGAR (60' x 60')	3385'
	54	BOX HANGAR (80' x 80')	3385'
	55	BOX HANGAR (80' x 80')	3384'
	56	BOX HANGAR (80' x 80')	3384'
	57	BOX HANGAR (80' x 80')	3383'

FAA APPROVAL

CONDITIONALLY APPROVED
SUBJECT TO LETTER DATED _____

_____
FEDERAL AVIATION ADMINISTRATION
DENVER AIRPORTS DISTRICT OFFICE

Date _____

CASE NO. _____

SPONSOR APPROVAL

_____
MAYOR, CITY OF HURRICANE DATE

LEGEND

	EXISTING	FUTURE/ULTIMATE
AIRPORT PROPERTY BOUNDARY		
AIRCRAFT PAVEMENT		
AIRPORT PAVEMENT MARKINGS		
ROAD (PAVED/GRAVEL)		
TO BE REMOVED	N/A	
BUILDING/HANGAR		
RUNWAY PROTECTION ZONE (RPZ)	RPZ(E) RPZ(E)	RPZ(F) RPZ(F)
BUILDING RESTRICTION LINE (25')	BRL(E)	BRL(F)(U)
RUNWAY OBJECT FREE AREA (ROFA)	ROFA(E)	ROFA(F)(U)
RUNWAY SAFETY AREA (RSA)	RSA(E)	RSA(F)(U)
RUNWAY OBJECT FREE ZONE (ROFZ)	OFZ(E)	OFZ(F)(U)
THRESHOLD SITING SURFACE (TSS)	TSS(E)	TSS(F)(U)
APPROACH SURFACE	APRC(E)	APRC(F)(U)
GLIDEPATH QUALIFICATION SURFACE	N/A	GQS(F)(U)
FENCE (8' HEIGHT OR LESS)		N/A
ROTATING BEACON	N/A	
PAPI	N/A	
WINDCONE/SEGMENTED CIRCLE		SAME
AIRPORT REFERENCE POINT		
THRESHOLD LIGHTS	N/A	0000 0000
REILS	N/A	
ASOS	N/A	

SPONSOR APPROVAL

No.	Description	Date
*1	UPDATED PER AIP No. 3-49-0012-05 BY JVIATION, INC.	4/27/16
*2	UPDATED PER AIP No. 3-49-0012-05 BY JVIATION, INC.	12/23/2019

NOTES:

1. BUILDING RESTRICTION LINE (BRL) DEPICTS REQUIRED SETBACKS FOR A TYPICAL 35' STRUCTURE. HEIGHTS OF EXISTING AND FUTURE BUILDINGS WITHIN THE BRL REMAIN CLEAR OF THE OFA'S AND AREA BELOW THE 7:1 TRANSITIONAL SURFACE (OR ARE OBSTRUCTION MARKED AND LIGHTED ACCORDINGLY).
2. ALL HANGARS HAVE AN ASSUMED 21' HEIGHT ADDED TO THE GROUND ELEVATION TO OBTAIN TOP ELEVATION.
3. POST PLANNING RUNWAY 17/35 DEPICTED AS PREFERRED LONG-TERM RUNWAY REALIGNMENT OPTION IN ORDER TO PROTECT AND PLAN FUTURE LANDSIDE DEVELOPMENT.
4. PER 14 CFR PART 77, SURFACE TRANSPORTATION ENTITIES' ELEVATION INCLUDE AN ADJUSTMENT FOR OBSTRUCTION ANALYSES PURPOSES (23 FEET FOR RAILWAYS, 17 FEET FOR INTERSTATE HIGHWAYS, AND 15 FEET FOR ALL OTHER PUBLIC ROADS)

SOURCE:

1. THIS EXHIBIT WAS ORIGINALLY CREATED BY ARMSTRONG CONSULTANTS IN NOVEMBER 2012 AND THIS ISSUE REPRESENTS AN UPDATED GEOMETRY BY JVIATION, INC. TO INCLUDE CHANGES TO THE AIRPORT RESULTING FROM DESIGN AND CONSTRUCTION COMPLETED WITHIN AIP NO. 05
2. OBJECT ELEVATIONS ARE ESTIMATED AND NOT BASED ON A SURVEY
3. PAPIs AND RUNWAY LIGHTING TO BE INSTALLED AT AN INTERIM PERIOD, BEFORE RUNWAY EXTENSION

MAGNETIC
11° 9'E ± 0° 22'
TRUE

GRAPHIC SCALE
0 150 300 600
(IN FEET)

DATE: 12/2019
ANNUAL RATE OF CHANGE: 0°6'W
SOURCE: U.S. NOAA

L:\1L8\AIP UPDATED 2019\PLANS\
03-1L8-ALP-ALP-UPDATED.dwg
Oct 07, 2020 - 3:04pm
jvinchamberlain

JVIATION®

HURRICANE

GENERAL DICK STOUT FIELD HURRICANE, UTAH

DES: S.G.J.
DR: S.G.J.
CH: T.G.D.
APP: T.G.D.

ISSUE RECORD

NO.	BY	DATE	DESCRIPTION
1	S.G.J.	DEC 2019	AS-BUILTS WITH FUTURE EDITS

AIRPORT LAYOUT PLAN

AIRPORT LAYOUT PLAN - EXISTING, FUTURE, AND ULTIMATE

AIP PROJ. NO. 3-49-0012-007-2018
JVIATION PROJ. NO. 2018.1L8.02
DATE: FEBRUARY 2020

SHEET NO. 03 of 16

HURRICANE CITY
UTAH

STAFF COMMENTS

Consideration and possible approval of **adjusting the lot line along lot 28 and hole 18 at Sky Mountain Golf Course**-Jeff Beteag

Discussion:
The property owner of lot 28 at Sky Mountain Golf Estates had their lot staked because they are getting ready to start a retaining wall and swimming pool. After the stakes were placed, they could see their lot encroached onto the golf course grass and there was a sprinkler head on their property that waters the golf course. They contacted me to walk the property and find a solution. After looking at the layout of the lot and the course, I thought the best remedy would be a boundary line (lot line) adjustment. Doing this would move the northwest pin five feet back towards the house but then move the northeast pin seven feet out further. This adjustment squares up the back of the lot and would help us avoid moving multiple sprinkler heads. It appears to be a pretty even trade of land, and it will make it better for both parties. The lot owner is willing to have their surveyor create a boundary line agreement that can be recorded to adjust the line. - Jeff Beteag

Findings:

Recommendation:

Attachments:
1. Lot 28 lot line adjustment
2. Lot 28 - Hole 18
3. Sky Mountain Golf Estates Map 1 Amended LLA Legals
4. Sky Mountain Golf Estates Map 1 Amended Lot 28 LLA

Move property pin back approximately 5′ to align with neighbors wall

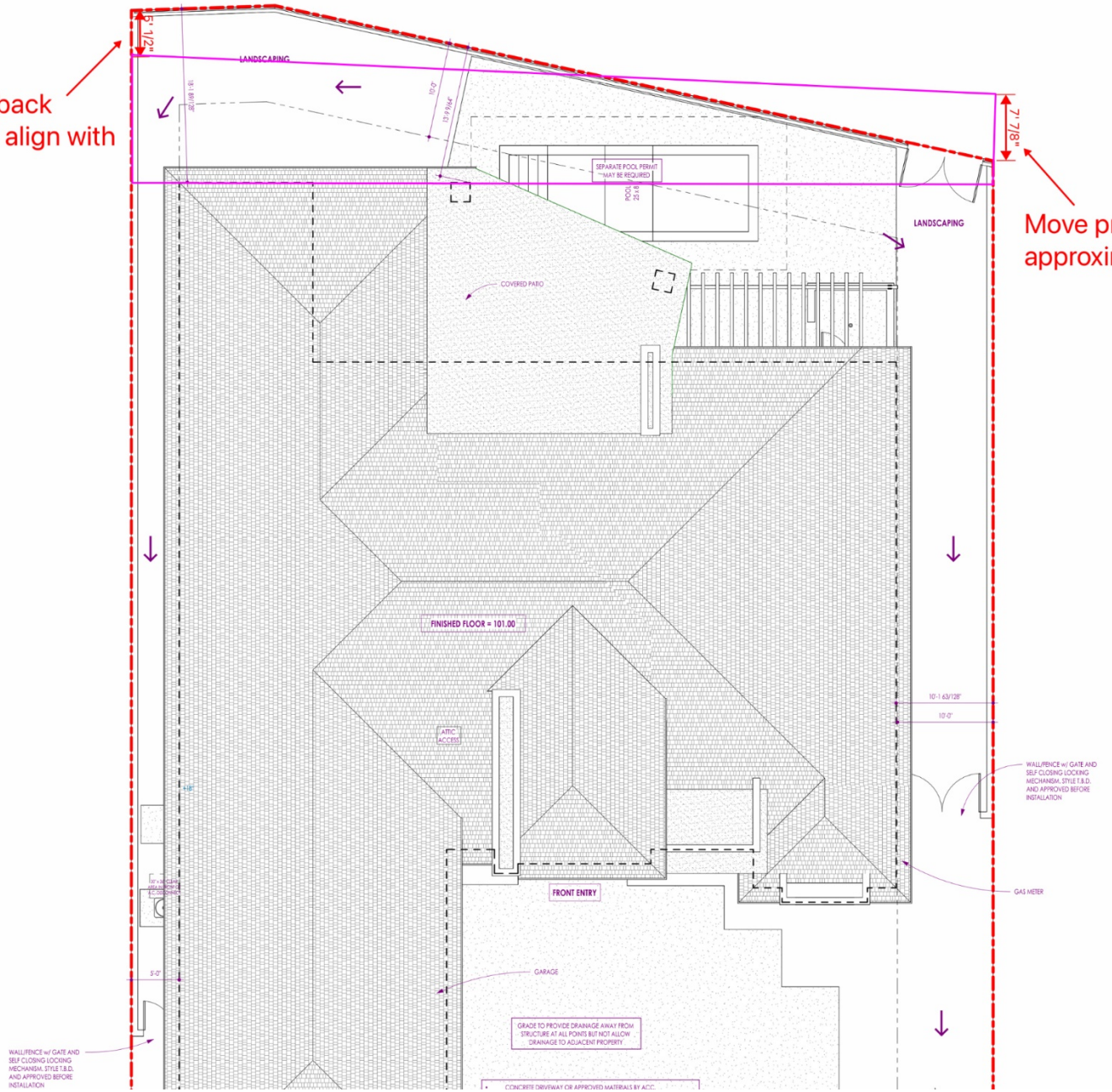

Move property pin out approximately 7′.

Proposed lot line adjustment

Legend

- Parcels
- Ownership
  - U.S. Forest Service
  - U.S. Forest Service Wilderness
  - Bureau of Land Management
  - Bureau of Land Management Wilde
  - National Park Service
  - Shivwits Reservation
  - Utah Division of Wildlife Resources
  - Utah Division of Transportation
  - State Park
  - State of Utah
  - Washington County
  - Municipally Owned
  - School District
  - Privately Owned
  - Water
  - Water Conservancy District
  - State Assessed Oil and Gas
  - Mining Claim

188.1 0 94.04 188.1 Feet

WGS_1984_Web_Mercator_Auxiliary_Sphere

DISCLAIMER: The information shown on this map was compiled from different GIS sources. The land base and facility information on this map is for display purposes only and should not be relied upon without independent verification as to its accuracy. Washington County, Utah will not be held responsible for any claims, losses or damages resulting from the use of this map.

Notes

PORTION OF LOT 28 OF SKY MOUNTAIN GOLF ESTATES MAP 1 AMENDED TO BE DEEDED TO HURRICANE CITY:

BEGINNING AT A POINT N16°13'23"E, 7.00 FEET AND N71°24'34"W, 40.07 FEET FROM THE NORTHEASTERLY CORNER OF LOT 28 OF SKY MOUNTAIN GOLF ESTATES MAP 1 AMENDED, RUNNING THENCE N71°24'34"W, 50.01 FEET TO THE WESTERLY LINE OF SAID LOT 28; THENCE N16°13'23"E, 5.00 FEET ALONG SAID WESTERLY LINE TO THE NORTHWESTERLY CORNER OF SAID LOT 28; THENCE ALONG THE BOUNDARY OF LOT 28 THE FOLLOWING TWO (2) COURSES: S75°41'00"E, 15.01 FEET; THENCE S61°34'39"E, 35.77 FEET TO THE POINT OF BEGINNING.

CONTAINING 190.18 SQ. FT. OR 0.004 ACRE.

PORTION OF HURRICANE CITY GOLF COURSE PROPERTY TO BE ADDED TO LOT 28 OF SKY MOUNTAIN GOLF ESTATES MAP 1 AMENDED:

BEGINNING AT THE NORTHEASTERLY CORNER OF LOT 28 OF SKY MOUNTAIN GOLF ESTATES MAP 1 AMENDED, RUNNING THENCE N61°34'39"W, 40.96 FEET ALONG THE NORTHERLY BOUNDARY OF SAID LOT 28; THENCE S71°24'34"E, 40.07 FEET; THENCE S16°13'23"W, 7.00 FEET TO THE POINT OF BEGINNING.

CONTAINING 140.12 SQ. FT. OR 0.003 ACRE.

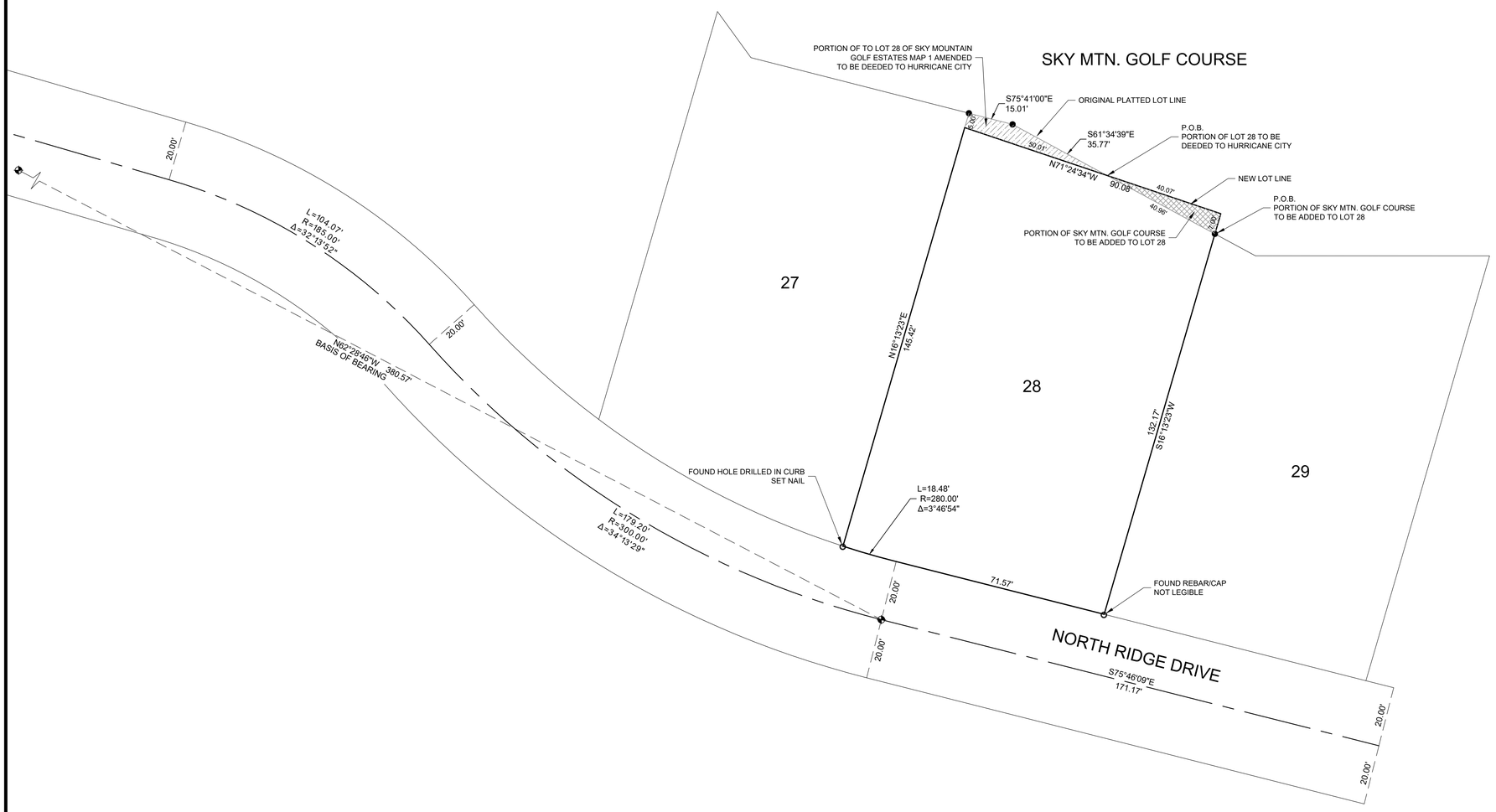

N

20 0 20 40

SCALE IN FEET

1" = 20'

SURVEYOR'S CERTIFICATE

I, ROGER M. BUNDY, DO HEREBY CERTIFY THAT I AM A PROFESSIONAL LAND SURVEYOR, AND THAT I HOLD CERTIFICATE No. 7654 IN ACCORDANCE WITH TITLE 58, CHAPTER 22, OF THE PROFESSIONAL ENGINEERS AND LAND SURVEYORS LICENSING ACT OF THE STATE OF UTAH. I FURTHER CERTIFY THAT I HAVE MADE A SURVEY OF THE HEREON DESCRIBED LAND IN ACCORDANCE WITH SECTION 17-23-17, HAVE VERIFIED MEASUREMENTS AND SET/FOUND MONUMENTS AS SHOWN HEREON AND THAT THIS IS A TRUE AND CORRECT REPRESENTATION OF SAID SURVEY.

PROFESSIONAL LAND SURVEYOR
2/28/24
7654
ROGER M. BUNDY
STATE OF UTAH

BOUNDARY DESCRIPTIONS

PORTION OF LOT 28 OF SKY MOUNTAIN GOLF ESTATES MAP 1 AMENDED TO BE DEEDED TO HURRICANE CITY:

BEGINNING AT A POINT N16°13'23"E, 7.00 FEET AND N71°24'34"W, 40.07 FEET FROM THE NORTHEASTERLY CORNER OF LOT 28 OF SKY MOUNTAIN GOLF ESTATES MAP 1 AMENDED, RUNNING THENCE N71°24'34"W, 50.01 FEET TO THE WESTERLY LINE OF SAID LOT 28; THENCE N16°13'23"E, 5.00 FEET ALONG SAID WESTERLY LINE TO THE NORTHWESTERLY CORNER OF SAID LOT 28; THENCE ALONG THE BOUNDARY OF LOT 28 THE FOLLOWING TWO (2) COURSES: S75°41'00"E, 15.01 FEET; THENCE S61°34'39"E, 35.77 FEET TO THE POINT OF BEGINNING.

CONTAINING 190.18 SQ. FT. OR 0.004 ACRE.

PORTION OF HURRICANE CITY GOLF COURSE PROPERTY TO BE ADDED TO LOT 28 OF SKY MOUNTAIN GOLF ESTATES MAP 1 AMENDED:

BEGINNING AT THE NORTHEASTERLY CORNER OF LOT 28 OF SKY MOUNTAIN GOLF ESTATES MAP 1 AMENDED, RUNNING THENCE N61°34'39"W, 40.96 FEET ALONG THE NORTHERLY BOUNDARY OF SAID LOT 28; THENCE S71°24'34"E, 40.07 FEET; THENCE S16°13'23"W, 7.00 FEET TO THE POINT OF BEGINNING.

CONTAINING 140.12 SQ. FT. OR 0.003 ACRE.

NARRATIVE

THE PURPOSE OF THIS SURVEY WAS TO MONUMENT THE CORNERS OF LOT 28 OF SKY MOUNTAIN GOLF ESTATES MAP 1 AMENDED AND TO SHOW EXCHANGE PARCELS TO BE EXCHANGED BETWEEN HURRICANE CITY AND THE OWNER OF SAID LOT 28. THE BASIS OF BEARING FOR THIS SURVEY ISN62°28'46"W BETWEEN TWO BRASS CAPS LOCATED IN NORTH RIDGE DRIVE AS SHOWN.

LEGEND

- ● SET 5/8" REBAR AND CAP MARKED R&B SURVEYING PLS 7654 (OR AS NOTED)
- ○ FOUND MONUMENT AS NOTED
- BRASS CAP IN CONCRETE COLLAR

RECORD OF SURVEY
LOT LINE ADJUSTMENT

PREPARED BY: R&B SURVEYING
862 N CAMINO PICO, WASHINGTON, UTAH 84780
PHONE: 435-632-3540

LOCATION:
SE 1/4 SEC. 29, T41S, R13W, SLB&M

COMPLETED:
FEBRUARY 27, 2024

REQUESTED BY:
ADAM WILKEY

HURRICANE CITY
UTAH

STAFF COMMENTS

Consideration and possible approval of **meeting times and the process of public engagement in planning the City Campus and Civic Center**

Discussion:
FFKR + Desert Edge Architecture has collaborated with Hurricane City to provide a comprehensive study of existing conditions for select city buildings and departments for the city and plan for future use of land owned by the City. The design team has conducted an assessment of existing conditions of Hurricane City Administration, Public Services (Planning, Engineering, Public Works), Police, and Courts. They are working to organize the data and document information for current and future needs that
respond to the growth of the population and the government resources needed to support the public.

In addition, the team is studying existing cities within Utah, how they have expanded, and the actions and response to growth. Due to the large size of the land that is under City Ownership, there may be an opportunity to develop a stronger 'City Center' to celebrate the historic qualities of the town, the unique and beautiful landscape and provide an active zone for daily activities for city residents and local business. Research shows that strong city centers result in thriving communities.

To realize this vision, it will be important to analyze public + private partnerships and other capital opportunities to minimize the tax burden to develop the property. The design team is working with Zions Securities and NAI real estate to help inform the City of the appropriate types of development that can be sustained on the site, and will help energize and activate this new City Center. - Jessica Hoffman

Findings:

Recommendation:

Attachments:
1. 03-07_hurricane city council meeting agenda

FFKR ARCHITECTS + DESERT EDGE architecture

HURRICANE CITY COUNCIL MEETING: MARCH 07

REPORT ON PROGRAMMING FOR CITY CENTER

AGENDA

- **DESIGN TEAM UPDATE**
  - Description of Department Interviews
  - Visioning Session Report
- **CAPITAL STRUCTURING**
  Recommendations & Options
- **COMMUNITY ENGAGEMENT STRATEGY**

OVERVIEW

FFKR + Desert Edge Architecture has collaborated with Hurricane City to provide a comprehensive study of existing conditions for select city buildings and departments for the city and plan for future use of land owned by the City.

The design team has conducted an assessment of existing conditions of Hurricane City Administration, Public Services (Planning, Engineering, Public Works), Police, and Courts. They are working to organize the data and document information for current and future needs that respond to the growth of the population and the government resources needed to support the public.

In addition, the team is studying existing cities within Utah, how they have expanded, and the actions and response to growth. Due to the large size of the land that is under City Ownership, there may be an opportunity to develop a stronger 'City Center' to celebrate the historic qualities of the town, the unique and beautiful landscape and provide an active zone for daily activities for city residents and local business. Research shows that strong city centers result in thriving communities.

To realize this vision, it will be important to analyze public + private partnerships and other capital opportunities to minimize the tax burden to develop the property. The design team is working with Zions Securities and NAI real estate to help inform the City of the appropriate types of development that can be sustained on the site, and will help energize and activate this new City Center

Objectives & Opportunities

Key Elements to the Project

- **CIVIC CENTER BUILDING**

Improve Working Conditions for City Employees to Enhance Productivity and Respond to the Communities Growing Needs

- **SITE MASTER PLAN**

Provide a City Center to Enhance Unique Community Culture

- **CAPITAL STRATEGIES**

Study Highest & Best Use Opportunities

  - What is the best sustainable mixed-use option?
  - Private + Public Partnership Strategies

Current Activity in Process

- In-Process Research and Analytics from Employee Surveys, Individual Department Interviews, and Data Gathering Sheets.
- Visioning Session – combining materials for Steering Committee review draft

***Focus**:* Identify Functions, Goals, and align the Program with the Mission of the Community

***Ongoing Research**:* Market Opportunities for Highest + Best Use, Financing Strategies

Next Steps

- Council Feedback
- Define Capital Partnership Options
- Community Outreach

Community Outreach Recommendation

The goal is to provide information to the City by May 10th for City Budget Discussions

Noticing/Advertising

- Social media "kit" with messaging/materials formatted to multiple platforms and ready to post (e.g., Facebook, Instagram, etc.)
- City Website
- City Newsletter – *the next quarterly newsletter (deadline for material submitted by March 15th)*
- City Utility Bills insert
- Flyers with QR codes for survey placed in City Buildings and High Traffic Areas
    - Survey Questions
        - Age
        - Do you live in the City: Full-time, part-time, don't live in the City
        - Do you own a business in the City
        - How long have you lived in the City
        - What neighborhood/area do you live in (can have a map to select a neighborhood/area, if names are not well-known)
        - Identify types of activities you may find appealing in a city center
            - Community Park
            - Water feature
            - Local retail shops
            - Food truck weekly events
            - Other: _____

In Person

Community/City Planned Events = May 6 presentation of 'status' (present 6-7pm)

- Share status of planning project + identify results of survey
- Display boards of information

HURRICANE CITY
UTAH

STAFF COMMENTS

Consideration and possible approval of Ordinance 2024-04 **adopting Ash Creek Special Service District's monthly sewer service fee.** -Dayton Hall

Discussion:
The three cities that make up the Ash Creek Special Service District (Hurricane, LaVerkin, Toquerville) have previously agreed to collect Ash Creek's monthly sewer fees. Hurricane City is currently collecting the fees as agreed. This ordinance formalizes the City's authority to collect the fee. Staff recommend approval. -Dayton Hall

Findings:

Recommendation:

Attachments:
1. Ordinance 2024-04 Approving Ash Creek SSD Monthly Fee Schedule from June 2022

Ordinance No. 2024-04

AN ORDINANCE OF THE CITY COUNCIL OF HURRICANE, UTAH, APPROVING AND ADOPTING MONTHLY SEWER SERVICE FEES ESTABLISHED BY ASH CREEK SPECIAL SERVICE DISTRICT

WHEREAS, Ash Creek Special Service District (hereafter "Ash Creek") was organized for the purpose of providing wastewater collection and treatment facilities and services for property within the corporate limits of Hurricane, LaVerkin and Toquerville, Utah, as well as other property in the unincorporated area of Washington County, Utah; and

WHEREAS, Hurricane, LaVerkin and Toquerville have previously agreed to be responsible for billing and collection of monthly sewer fees, as established by Ash Creek, for each of their respective communities; and

WHEREAS, Ash Creek has approved and adopted a schedule of monthly fees pursuant to a Resolution dated June 6, 2022 and duly adopted after notice and public hearing; and

WHEREAS, the Hurricane City Council desires to formally adopt and incorporate said monthly fee schedule into its ordinances; and

WHEREAS said City Council deems it necessary and desirable for the preservation and protection of the health, safety and welfare of the residents of Hurricane, Utah,

BE IT HEREBY ORDAINED by the City Council of Hurricane, Utah, that the schedule of monthly sewer fees attached hereto as Exhibit A and incorporated herein as if fully set forth shall, and is hereby, approved and adopted.

BE IT FURTHER ORDAINED that the provisions of this Ordinance shall supersede any other ordinance in conflict herewith and shall be incorporated into the Hurricane City Code.

BE IT FURTHER ORDAINED that this Ordinance shall be deemed to be of an urgent nature or in the nature of an emergency and shall take effect immediately upon publication and posting as required by law.

PASSED AND APPROVED by the Hurricane City Council on this 7th day of March, 2024.

_____
Nanette Billings, Mayor

Attest:

_____
Cindy Beteag, Recorder

The foregoing Ordinance was presented at a regular meeting of the Hurricane City Council held at the Hurricane City Office Building on the 7th day of March, 2024. Whereupon a motion to adopt and approve said Resolution was made by _____ and seconded by _____. A roll call vote was then taken with the following results:

	Yea	Nay	Abstain	Absent
Joseph Prete	___	___	___	___
Clark Fawcett	___	___	___	___
David Hirschi	___	___	___	___
Kevin Thomas	___	___	___	___
Drew Ellerman	___	___	___	___

_____

Cindy Beteag, Recorder

Exhibit A

SCHEDULE II
Monthly Rate Schedule
Effective July 1, 2022

User Category	Monthly Rate
I. Permanent Residential: all residential dwelling units intended or used primarily for permanent, continuous or non-seasonal occupancy, per unit (including single family homes, mobile homes, permanent trailers, permanent RVs, condominiums, townhomes, apartments, etc.)	$35.00
II. Transitory Residential: all residential dwelling units intended or used primarily for transitory, overnight or seasonal occupancy, per unit (including RV parks, overnight RV rentals and camp units, etc.)	18.00
III. Non-residential: commercial and institutional, (including schools, churches, motels, etc.)	
Up to first 12,000 gallons of water used*	42.00
For each additional 1000 gallons of water used above 12,000 gallons*	3.19

*For commercial, schools, churches, etc., monthly water usage shall be based on the average monthly water use during the months of December, January and February of each year. For motels, monthly water usage shall be based on the average monthly water use during the months of May, June and July of each year.

Note: All fees shall be subject to an automatic increase of 5% (five percent) per annum beginning on January 1, 2024, and each January 1 thereafter until otherwise determined by resolution of the District Administrative Control Board.

HURRICANE CITY
UTAH

STAFF COMMENTS

Consideration and possible approval of Ordinance 2024-05 **approving and adopting Ash Creek Special Service District's Development Procedures Design Standards and Construction Specifications.** ---Dayton Hall

Discussion:
Hurricane City, as a member of Ash Creek Special Service District, has previously adopted development standards for sewer installation within the City. Ash Creek has now adopted updated standards. The proposed ordinance adopts Ash Creek's updated standards. Ash Creek sits on the City's Joint Utility Committee and reviews development plans in conjunction with City staff. The City's adoption of Ash Creek's standards confirms that development in the City is required to comply with Ash Creek's standards. Ash Creek's standards, which are 172 pages long, are included in the packet. Staff recommend approval. -Dayton Hall

Findings:

Recommendation:

Attachments:
1. Ordinance 2024-05 Adopting Updated Design Standards and Construction Specifications for ACSSD
2. Ash Creek SSD Development Procedures, Design Standards & Construction Specifications

Ordinance No. 2024-05

AN ORDINANCE OF THE CITY COUNCIL OF HURRICANE, UTAH, APPROVING AND ADOPTING ASH CREEK SPECIAL SERVICE DISTRICT'S "DEVELOPMENT PROCEDURES, DESIGN STANDARDS AND CONSTRUCTION SPECIFICATIONS, UPDATED JANUARY 2023."

WHEREAS, Ash Creek Special Service District (hereafter "Ash Creek") is a Utah special service district organized and existing under the laws of the State of Utah for the purpose of providing sewer wastewater collection and disposal services for property in Hurricane, LaVerkin, Toquerville and Apple Valley, as well as certain unincorporated areas in New Harmony Valley; and

WHEREAS, in order to ensure uniform application and enforcement of Ash Creek rules and regulations governing the development of property throughout the district, Ash Creek and each of the municipalities of Hurricane, LaVerkin, Toquerville and Apple Valley have previously entered into an agreement providing that all such rules and regulations of Ash Creek, as amended from time to time, shall be adopted by ordinance of each municipality and incorporated into its ordinances; and

WHEREAS, the Administrative Control Board of Ash Creek has recently approved and adopted updates and revisions to said rules and regulations as contained in "Development Procedures, Design Standards and Construction Specifications, updated January 2023;" and

WHEREAS, the City Council of Hurricane, Utah now deems it necessary and desirable for the preservation and protection of the public health, safety and welfare of the residents of Hurricane, Utah to approve and adopt said updated and revised rules and regulations for incorporation into the ordinances of Hurricane City,

BE IT HEREBY ORDAINED, by the City Council of Hurricane, Utah that the updated and revised rules and regulations contained in "Development Procedures, Design Standards and Construction Specifications, updated January 2023," a copy of which is attached hereto and incorporated herein as Exhibit A, are hereby approved, adopted and incorporated into the ordinances of Hurricane City.

BE IT FURTHER ORDAINED that this ordinance shall take effect at the earliest possible date allowed by law after publication and posting and shall supersede all prior rules and regulations relating to the design, construction, installation, maintenance and operation of sewer facilities and related improvements on property within the boundaries of Hurricane.

PASSED AND APPROVED by the Hurricane City Council on this 7th day of March, 2024.

HURRICANE CITY

_____
Nanette Billings, Mayor

Attest:

_____
Cindy Beteag, City Recorder

The foregoing Ordinance was presented at a regular meeting of the Hurricane City Council held at the Hurricane City Office Building on the 7th day of March, 2024. Whereupon a motion to adopt and approve said Resolution was made by _____ and seconded by _____. A roll call vote was then taken with the following results:

	Yea	Nay	Abstain	Absent
Joseph Prete	___	___	___	___
Clark Fawcett	___	___	___	___
David Hirschi	___	___	___	___
Kevin Thomas	___	___	___	___
Drew Ellerman	___	___	___	___

_____
Cindy Beteag, Recorder

.

DEVELOPMENT PROCEDURES
DESIGN STANDARDS AND
CONSTRUCTION SPECIFICTIONS

Revised & Adopted: January 2023

Contents

1.0 GENERAL REQUIREMENTS AND POLICIES 1
1.1 General Requirements 1
1.1.1 Introduction 1
1.1.2 Title 1
1.1.3 Purpose 1
1.1.4 Intent 2
1.1.5 Deviations 2
1.1.6 Abbreviations 2
1.1.7 Definitions 3
1.1.8 Referenced Codes and Standards 4
1.1.9 Indemnification of Ash Creek SSD on Developer Sponsored Projects 4
1.1.10 Contractor Licensing Requirements 5
1.2 Policies 5
1.2.1 Compliance with Rules and Regulations 5
1.2.2 Access to Public Wastewater Services 5
1.2.3 Method of Providing Public Wastewater Services 6
1.2.4 Private or Common Lateral Wastewater Lines 9
1.2.5 Off-Road Public Wastewater Lines 10
2.0 DEVELOPMENT PROCEDURES 11
2.1 General Overview 11
2.2 Developer and/or Owner Responsibilities 11
2.3 Public Wastewater System Extensions and Modifications 12
2.3.1 Service Provider Letter 12
2.3.2 Design 13
2.3.3 Construction and Inspection 13
2.3.4 Final Project Approval 14
2.3.5 Warranty Period 15
2.4 Requirements of Other Public Agencies 15

3.0 PLAN DESIGN AND REVIEW 16
3.1 General 16
3.2 Construction Drawings 16
3.3 Plan Review Submittal 19
3.4 Easements 19
3.5 Special Agreements and Permits 23
3.6 Construction Cost Estimate 23
3.7 Record Drawings 24
3.8 Operation and Maintenance Manuals 25
3.9 Certificate of Review 26
4.0 DESIGN REQUIREMENTS 27
4.1 General 27
4.2 Design Criteria for Public Wastewater System Extensions and Modifications 27
4.2.1 Basis of Design 27
4.2.2 Location of Facilities 28
4.2.3 Separation from Other Utilities 29
4.3 Gravity Flow Main Lines 30
4.4 Manholes 32
4.5 Low Pressure Sewer Systems 34
4.6 Borings 37
4.7 Casings 38
4.8 Service Laterals 38
4.9 Pretreatment Requirements 40
4.10 Onsite Wastewater Systems 41
4.11 Wastewater Pump Stations 42
4.12 Force Mains 42
5.0 MATERIAL REQUIREMENTS 43
5.1 General 43
5.2 Gravity Pipe 43
5.3 Pressure Pipe 46

5.4 Manholes 47
5.5 Low-Pressure Sewer System 59
5.6 Wastewater Pump Stations 61
5.7 Pipe Couplings 61
5.8 Bedding and Backfill Material 63
5.9 Casings 65
5.10 Miscellaneous Material 67
6.0 CONSTRUCTION REQUIREMENTS 71
6.1 Inspection of Public Wastewater System Extension and Modifications 71
6.1.1 General 71
6.1.2 Contractor Submittals 72
6.1.3 Preconstruction Meeting 73
6.1.4 Periodic Inspections 74
6.1.5 Preliminary Inspection 75
6.1.6 Final Inspection 76
6.1.7 Warranty Inspection 77
6.2 Inspection of Private Lateral Wastewater Lines 78
6.2.1 Scheduling Inspection Appointments 78
6.2.2 Required Inspections 78
6.2.3 Private Lateral Cleanout Locations 79
6.2.4 Inspection Procedure 79
6.3 General Construction Requirements 81
6.3.1 Protection of Existing Public Wastewater System 81
6.3.2 Excluding Construction Debris and Material from the Existing Public Wastewater System 81
6.3.3 Maintaining Existing Wastewater Flows 82
6.3.4 Isolation of New Construction 82
6.3.5 Record of Drawing Information Collected by Contractor 83
6.3.6 Safety 83
6.3.7 Materials Handling 84

6.3.8 Installation of Precast Concrete Products 84
6.4 Trench Excavations 85
6.4.1 General 85
6.4.2 Pavement Removal 85
6.4.3 Trenching 85
6.4.4 Dewatering 86
6.4.5 Blasting 88
6.4.6 Borings and Casings 88
6.5 Pipe Embedment 88
6.5.1 General 88
6.6 Pipe Installation 89
6.6.1 General 89
6.6.2 Pipe Laying 90
6.6.3 Tracer Wire Installation 91
6.6.4 Marking Tape Installation 91
6.6.5 Connecting to Pipe Stubs 91
6.6.6 Installing Private Lateral Stubs 92
6.7 Trench Backfill and Paving 93
6.7.1 Trench Backfill in Roads 93
6.7.2 Pavement Replacement 94
6.8 Trench Dikes 95
6.8.1 General 95
6.8.2 Construction Method 95
6.9 Manholes 96
6.9.1 General 96
6.9.2 Subgrade 96
6.9.3 Manhole Bases 96
6.9.4 Wall and Cone Sections 97
6.9.5 Backfilling Manholes 97

6.9.6 Installation of Temporary Plywood Bottoms 98
6.9.7 Adjustment of Manhole Frame and Cover to Final Grade 98
6.9.8 Drop Manholes 102
6.9.9 Connection to Existing Manhole 102
6.10 Wastewater Pump Stations 103
6.10.1 General 103
6.10.2 Startup Services 104
6.10.3 Training 104
6.11 Repair of Existing Wastewater System 104
6.11.1 General 104
6.11.2 Repair of Wastewater Lines 105
6.11.3 Repair of Manholes and Other Appurtenances 106
6.12 Abandoning Existing Wastewater System 106
6.12.1 General 106
6.12.2 Abandoning Public Wastewater Lines 106
6.12.3 Abandoning Manholes 107
6.12.4 Abandoning Private Lateral Wastewater Lines 107
6.13 Private Lateral Wastewater Lines 107
6.13.1 General 107
6.13.2 Connection to Existing Private Lateral Stubs 108
6.13.3 Connection to Existing Gravity Public Wastewater System Main Lines 109
6.13.4 Connection to Existing Public Low-Pressure Main Lines 109
6.13.5 Connection to Existing Manhole 110
6.13.6 Cleanout Requirements 110
6.13.7 Connection to Building Sewer 110
6.14 Grease Interceptors and Sampling Manholes 111
6.14.1 General 111
6.16 Acceptance Testing for Public Wastewater System Extensions and Modifications 111
6.16.1 General 111

6.16.2 Visual Inspection 113
6.16.3 Low-Pressure Air Test 113
6.16.4 Hydrostatic Test 115
6.16.5 Manhole Leakage Test 117
6.16.6 Manhole Vacuum Test 118
6.16.7 TV Inspection 118
6.16.8 Tracer Wire Continuity Testing 120
6.16.9 Visual Inspection of Heat Fused HDPE Pipe Bead Removal and Extraction 120
6.16.10 Wastewater Pump Station Testing 121
6.16.11 Deflection Testing 121
6.16.12 Failed Test Correction 122
6.17 Acceptance Testing for Private Lateral Wastewater Lines 122
6.17.1 General 122
6.17.2 Visual Inspection 123
6.17.3 Exfiltration Test or Low-Pressure Air Test of Gravity Flow Private Laterals 123
6.17.4 Hydrostatic Test 124
6.17.5 Testing of Pressure to Gravity Transitions 125
6.17.6 Exfiltration Test or Vacuum Test of Grease Interceptors, Sand/Oil Interceptors, Sampling Manholes and Private Exterior Pump Stations 125
6.17.7 Dye Test 126
6.17.8 TV Inspection 127
6.17.9 Exterior Pump Operation 127
6.17.10 Failed Test Correction 128
6.18 Cleanup 128
6.18.1 General 128
7.0 Wastewater Pump Stations 129
7.1 General Requirements and Policies 129
7.2 Development Procedures for Wastewater Pump Stations 129
7.2.1 Preliminary Design Report 129
7.3 Design Requirements 130

7.3.1 Pump Station Site Location 130
7.3.2 Pump Station Components 132
7.3.3 Force Main 136
7.3.4 Pump Station Building 138
7.3.4 Documents and Construction 143

LIST OF APPENDICES

Appendix A: Pretreatment Survey

Appendix B: Inspection Form

Appendix C: Ash Creek General Notes

Appendix D: Detail Drawings

1. Sewer Manhole
2. Rind & Lid/Frame & Lid/Manhole Adjustment to Grade
3. Cast-In-Place Manhole Base
4. Shallow Manhole
5. Sewer Service Connection
6. Sewer Cleanout W/Lid
7. Grease and Sand Interceptor
8. Air Vac
9. Pressure Line Connection to Manhole
10. Typical Trench
11. RV Dump Sation/RV Sewer Dump Station Section

1.0 GENERAL REQUIREMENTS AND POLICIES

1.1 General Requirements

1.1.1 Introduction

Ash Creek Special Service District (Ash Creek SSD) is a county government entity over wastewater established in Utah under the Utah State Code. Ash Creek SSD was organized by the Washington County Commission in 1980 as a general-purpose special service district in Washington County, Utah. Ash Creek SSD is administered by a 6-member Administrative Control Board consisting of the mayor and one city council member from each of the municipalities of Hurricane, LaVerkin and Toquerville.

Ash Creek SSD was originally organized so that its boundaries coincided with the municipal boundaries of Hurricane, LaVerkin, and Toquerville, the residents of which are served by a sewer collection and disposal system which is owned and operated by Ash Creek SSD. Ash Creek SSD has enacted Rules of Operation and Construction Standards, which are subject to amendment from time to time, governing the use of the system.

In 2008, the Washington County Commission expanded Ash Creek SSD by annexing into its boundaries certain unincorporated territory in the east half of Washington County. Ash Creek SSD Rules of Operation were amended to provide a framework of rules and regulations governing sewer facilities in these areas. In 2022 a petition for the annexation of the town of Apple Valley was submitted and approved and the town of Apple Valley was incorporated into Ash Creek SSD.

1.1.2 Title

These regulations shall be known as Development Procedures, Design Standards and Construction Specifications for Ash Creek Special Service District.

1.1.3 Purpose

The purpose of Ash Creek SSD shall be to provide for orderly and efficient collection and treatment of wastewater to all areas within the boundaries of the cities of Hurricane, La Verkin, Toquerville, Apple Valley, and any unincorporated areas of Washington County that may be annexed into Ash Creek SSD.

The purpose of Ash Creek SSD's Development Procedures, Design Standards and Construction Specifications are to establish procedures and provide minimum standards and specifications to control and regulate the development, design, construction, and use of wastewater facilities within Ash Creek SSD.

The provisions of these regulations shall apply to the development, design, and construction of any extension, replacement, relocation, modification, repair, abandonment, connection to and use of the public and private wastewater facilities within Ash Creek SSD.

1.1.4 Intent

The Administration Control Board of Ash Creek SSD has established certain requirements for development approval and construction of wastewater facilities through adoption of these Standards. Each member city has adopted these Development Procedures, Design Standards and Construction Specifications as ordinances and are enforceable as such.

1.1.5 Deviations

Ash Creek SSD does not intend these standards and specifications to replace professional judgment and competent workmanship on the part of the Project Engineer or Contractor.

Proposed designs, materials, or construction methods deviating from these standards and specifications shall be submitted to Ash Creek SSD for review. The submittal shall include additional data, computations, and any other documentation required by Ash Creek SSD. Written approval by Ash Creek SSD authorizing a deviation from these standards and specifications shall be received prior to incorporating the deviation into the project.

Certain environmental or site-specific conditions may require the design and construction of wastewater facilities to exceed the minimum standards and specifications contained in these Standards. It shall be the responsibility of the Project Engineer and Contractor to identify these conditions and modify the design and installation, accordingly, as approved by Ash Creek SSD.

1.1.6 Abbreviations

As used herein, the following abbreviations have the meaning as set forth:

- AASHTO: American Association of State Highway and Transportation Officials.

- ANSI: American National Standards Institute.
- ASTM: American Society for Testing and Materials.
- AWWA: American Water Works Association.
- IPC: International Plumbing Code.

1.1.7 Definitions

As used herein, the following terms have the meaning as set forth:

- "City" or "Municipality" means Hurricane, LaVerkin, Toquerville or Apple Valley.
- "County" means Washington County, Utah.
- "Developer" means any person or entity seeking permission to construct a sewer system for a particular development or parcel of property.
- "Developer or Owner's Engineer" means the registered professional engineer which is designated and retained by a developer or owner to design the proposed sewer system facilities in accordance with Ash Creek SSD's rules and regulations.
- "District" means Ash Creek Special Service District, and any officer, employee or other agent duly authorized by Ash Creek SSD to act in its behalf.
- "District Engineer" means any registered professional engineer designated by Ash Creek SSD to provide general engineering services for Ash Creek SSD and shall include any independent professional consultant retained by Ash Creek SSD on an ongoing basis to perform engineering services on behalf of Ash Creek SSD and to advise Ash Creek SSD's Administrative Control Board and staff on engineering matters.
- "District Rules and Regulations" means the District's Rules of Operation and these Development Procedures, Design Standards and Construction Specifications for Ash Creek Special Service District, as amended from time to time.
- "Large Underground Wastewater Disposal " (LUWD) System means an underground wastewater disposal system designed to handle more than 5,000 gallons per day of domestic wastewater, or wastewater that originates in multiple units under separate ownership (except condominiums), or any other underground wastewater disposal system

not covered under the definition of an onsite wastewater system as outlined in the Utah Administrative Code R317-4.

- "Onsite Wastewater Systems" (Septic Systems) means an underground wastewater disposal system that is designed for a capacity of 5,000 gallons per day or less and is not designed to serve multiple dwelling units that are owned by separate owners except condominiums. It usually consists of a building sewer, a septic tank, and an absorption system.

- "Sewer facilities" means all aspects of an existing or proposed sewer system, including sewer lines and all related facilities.

- "Subdivision" means any division of property where a residential, commercial, or industrial unit is to be built. Any subdivision of property approved or recorded before January 22, 2000 is approved for a residential septic tank.

- "Superintendent" means the person designated by the Administrative Control Board of Ash Creek SSD to have the charge, supervision, and administration of Ash Creek SSD's daily operation. The superintendent may, at his option, designate a person or persons to represent him for inspecting, and reporting on the work as it progresses.

- "Work" means that which is proposed to be constructed or done under a contract or permit, including all activities related to the construction, installation, inspection, and testing of sewer facilities for a project or development.

1.1.8 Referenced Codes and Standards

When reference is made to a Standard Specification (ASTM, IPC, City Standards, County Standards, etc.) the specification referenced shall be understood to mean the latest revision of said specification.

1.1.9 Indemnification of Ash Creek SSD on Developer Sponsored Projects

A. Ash Creek SSD, its employees, officers, independent contractors, and agents shall be indemnified and held harmless from all claims resulting from the design, construction, inspection, and operation of the new wastewater facilities which arise prior to Final Project Approval and acceptance of the wastewater improvement facilities by Ash Creek SSD.

B. Developer and Developer's Contractor shall be responsible for full compliance with the applicable excavation, trenching, confined space requirements, and worker safety

regulations of the U.S. Department of Labor Occupational Safety and Health Administration as administered by the Utah Occupational Safety and Health Division.

1.1.10 Contractor Licensing Requirements

A. Contractors performing construction on the wastewater system within Ash Creek SSD shall possess all licenses required by local and state rules and regulations.

B. As a minimum, Contractors shall possess a valid Utah Contractor's License and shall be licensed and insured to perform wastewater system construction in accordance with state law.

C. For Ash Creek SSD specific projects, where pipe sizes are 12 inches or greater or where depths of pipe are 12 foot or greater, contractors must be preapproved. A list of preapproved contractors will be maintained by Ash Creek SSD and shall be renewed on an annual basis. In order to be listed on the preapproved contractor pool a contractor must submit the following:

1. Requirements for contractor preapproval are as follows:
    a. A minimum of 5 years' experience.
    b. A minimum of 3 completed projects documenting pipe depth, pipe diameter, and bypass pumping volume.
    c. Project reference from the owner's representative for the project provided.
    d. On-site supervisor with experience on documented projects.

1.2 Policies

1.2.1 Compliance with Rules and Regulations

All requests for wastewater service or approval of wastewater facilities shall be governed by and subject to compliance with Ash Creek SSD's Rules and Regulations, which encompasses Ash Creek SSD's Rules of Operation and Ash Creek SSD's Development Procedures, Design Standards and Construction Specifications, as they now exist or as they may be amended from time to time.

1.2.2 Access to Public Wastewater Services

A. The design and construction of extensions or modifications of the Public Wastewater System for all new developments shall provide a Public Wastewater Line adjacent to all

lots or parcels within each developed property for connection of Private Lateral Wastewater Lines.

B. A Wastewater Line serving a lot or parcel shall not cross another lot or parcel to access the Public Wastewater System with the following limited exception.

   1. The public wastewater line to which the Private Lateral Wastewater Line is connecting is located along or near a common lot line with an adjacent lot or parcel and the area of encroachment into the adjacent lot or parcel is within an Ash Creek SSD minimum 15' easement. An easement for the Private Lateral Wastewater Line granted by the property owner of the adjacent property specifically to the property being served by the Private Lateral Wastewater Line shall be executed and recorded, or a private lateral easement specifically granting the easement to the property being served by the Private Lateral Wastewater Line shall be indicated on the Subdivision Plat.

1.2.3 Method of Providing Public Wastewater Services

The proposed method of providing public wastewater service to each project or development shall require review and approval by Ash Creek SSD. This is a general overview. For more detailed information on Ash Creek SSD's Policy regarding wastewater service please see Ash Creek SSD's Rules of Operation.

A. Gravity Flow

   Development of residential, commercial, or industrial subdivisions or other multiple lot/unit developments within the incorporated area of Ash Creek SSD shall, unless otherwise approved by Ash Creek SSD, be required to connect said subdivision or development to Ash Creek SSD's sewer system.

   Development on single lot parcels in the incorporated and unincorporated area of Ash Creek SSD or subdivisions and multiple lot/unit developments in the unincorporated area of Ash Creek SSD that are within three hundred (300) feet of Ash Creek SSD's wastewater system or other wastewater treatment facility approved or operated by Ash Creek SSD, shall at owners expense be required to connect any dwelling, building or other structure or subdivision directly to Ash Creek SSD's wastewater system or other wastewater treatment facility approved or operated by Ash Creek SSD in accordance with Ash Creek SSD's rules and regulations.

B. Conventional/Alternative Onsite Wastewater Systems (Septic Systems)

Development on single lot parcels or subdivisions and multiple lot/unit developments in the unincorporated area of Ash Creek SSD that are more than three hundred (300) feet from Ash Creek SSD's wastewater system or other wastewater treatment facility approved or operated by Ash Creek SSD, shall at owners expense connect any dwelling, building or other structure or subdivision to an approved conventional onsite wastewater system or alternative onsite wastewater system in accordance with rule 317 of the Utah Administrative Code, the Southwest Utah Public Health Department's Onsite Wastewater Regulations, and Ash Creek SSD's Rules and Regulations, as they now exist or as may be amended from time to time.

In the event that Ash Creek SSD's sewer system, sewer line or other wastewater treatment facility or other system approved or operated by Ash Creek SSD is subsequently extended, constructed or installed to within three hundred (300) feet of the property for which an approved onsite wastewater system or alternative onsite wastewater system has been constructed and installed for any property containing a dwelling, building or other structure or subdivision, said owner or subdivision shall, at his/its sole expense and within sixty (60) days of the date of such extension, construction or installation, disconnect said dwelling, building or other structure or subdivision from said onsite wastewater system or alternative onsite wastewater system, pay the applicable impact fee and connect to Ash Creek SSD's sewer system or other wastewater treatment facility or system approved or operated by Ash Creek SSD.

Any owner or developer of a residential, commercial, or industrial subdivision or other multiple lot/unit development within the incorporated area of Ash Creek SSD who desires to construct and install a sewer system, satellite treatment plant, or other treatment works which is not connected to Ash Creek SSD's sewer system shall provide Ash Creek SSD with the needed information and documentation as required in Ash Creek SSD's Rules of Operation. Ash Creek SSD at its sole discretion, may approve such sewer system, satellite treatment plant or other treatment works.

C. Low-Pressure Sewer System

1. Public Wastewater System design shall avoid Low-Pressure Sewer Systems. Ash Creek SSD permits the construction of Low-Pressure Sewer Systems only under certain limited conditions, where at the sole discretion of Ash Creek SSD, the option of providing wastewater service by gravity flow main lines is not feasible.

2. If the use of a Low-Pressure Sewer System is approved the following requirements shall be met:
    a. Notes concerning the Low-Pressure Sewer System shall be included on the subdivision plat for the project.
    b. Notice shall be recorded against each lot served by the Low-Pressure Sewer System which will serve as notification to all future lot owners of the responsibilities associated with the Private Lateral Low-Pressure Wastewater Lines.
    c. The entire Low-Pressure private sewer lateral shall be the responsibility of the property owner. The property owner shall be responsible to clean, repair, and correct any problem associated with the Low-Pressure lateral from the building to the Public Wastewater System Low-Pressure mainline, including the connection to the Public Wastewater System Low-Pressure mainline.
    d. The Low-Pressure Sewer System shall meet the requirements of Ash Creek SSD's Development Procedures, Design Standards and Construction Specifications.

D. Pump Stations

1. Public Wastewater System design shall avoid wastewater pump stations. Ash Creek SSD permits the construction of wastewater pump stations only under certain limited conditions where, in the sole discretion of Ash Creek SSD, no physically feasible, financially reasonable, or legally achievable gravity flow collection system or Low-Pressure sewer system can be constructed.

2. Wastewater Pump Stations shall be designed and constructed according to Ash Creek SSD's Development Procedures, Design Standards and Construction Specifications. Equipment and material which minimize operational costs and other replacement and repair expenses to Ash Creek SSD in the future shall be used.

3. In accordance with Ash Creek SSD's Rules of Operation: all responsibility and liability for payment of all costs of operation, maintenance, and repair of any such sewer pump station shall, unless otherwise agreed in writing, remain with the owner or developer for a period of two (2) years from the date that said sewer pump station is completed and accepted by Ash Creek SSD. In order to guarantee payment of said costs of operation, maintenance and repair by the owner or developer for said two (2) year period, the owner or developer shall provide Ash Creek SSD with a letter of credit, or some other acceptable financial guarantee, for the estimated costs of operation, maintenance and repair, as determined by said owner's or developer's engineer.

1.2.4 Private or Common Lateral Wastewater Lines

The method of connecting to Ash Creek SSD's Sewer System by private or common lateral wastewater lines shall comply with Ash Creek SSD's Rules of Operation. This is a general overview. For more detailed information on Ash Creek SSD's Policy regarding private or common laterals please see Ash Creek SSD's Rules of Operation.

A. Each residence, building or other facility, including units of multiple unit buildings where the units are side by side, shall connect to the Public Wastewater System by way of a separate Private Lateral Wastewater Line.

B. Ash Creek SSD will permit a Common Lateral Wastewater Line only under the following conditions:

    1. Stacked units where the upper unit(s) has no direct access to a separate Private Lateral Wastewater Line. Under this scenario a 6" lateral shall be installed.

    2. A building sewer from a front building may be extended to a rear building and the whole considered as one building sewer where:
        a. One building stands at the rear of another on one lot,
        b. Connection of the rear building to Ash Creek SSD's system cannot be accomplished through an adjoining alley, courtyard, or driveway, and
        c. Both buildings are at all times owned by the same person or entity;
        d. In the event that ownership of either building is changed in any manner, separate sewer facilities shall be constructed by the owner to the rear building or dwelling.

    3. A building sewer from a front dwelling may be extended to a rear dwelling and the whole considered as one building sewer where:
        a. One dwelling stands at the rear of another on one lot,
        b. Both dwellings are at all times owned by the same person, and
        c. The conditional use permit is obtained from the local municipality for the purpose of allowing occupancy of the rear dwelling on a temporary basis by an immediate family member because of declining health or advanced age.
        d. In the event that ownership of either building is changed in any manner, separate sewer facilities shall be constructed by the owner to the rear building or dwelling.

C. Grease interceptors shall not be placed on common laterals. All facilities or businesses requiring a grease interceptor shall have a separate grease interceptor.

D. Ejector pumps and Low-Pressure pumps shall not be placed on common laterals for multi-unit buildings.

E. The entire private sewer lateral shall be the responsibility of the property owner. The property owner shall be responsible to clean, repair, and correct any problem associated with the sewer lateral from the building to the Public Wastewater System line, including the connection to the Public Wastewater System Lines.

F. The entire common sewer lateral shall be the responsibility of the homeowners, condominium and or building association. Responsibility of the common lateral shall include cleaning, repairing, and correcting any problem associated with the common sewer lateral from the building to the Public Wastewater System line, including the connection to the Public Wastewater System Lines.

1.2.5 Off-Road Public Wastewater Lines

A. All wastewater lines that are part of the Public Wastewater System, including gravity flow lines, low-pressure sewer system lines, and pump station force mains, shall be located in maintained public or private streets, roads, or rights-of-way.

B. If local conditions prevent compliance with this policy, Ash Creek SSD may allow Off-Road Public Wastewater Lines if the following requirements are met.

1. The Off-Road lines shall meet the requirements of Ash Creek SSD Standards.
    a. A 25-foot easement is granted by the property owner.
    b. A 6 inch deep, all-weather, 14-foot road centered over sewer line and manholes is constructed.
    c. Swing panel gates through fence lines must be provided for access.

2. Revegetation and erosion protection of the off-road corridor shall be provided. The Developer shall be solely responsible for revegetation and erosion protection of Off-Road Public Wastewater Line corridors during the warranty period. Revegetation plans shall specifically exclude trees, bushes or other vegetation that would impede travel along the corridor by Ash Creek SSD personnel and equipment.

2.0 DEVELOPMENT PROCEDURES

2.1 General Overview

Approval to design and construct new wastewater facilities intended to become part of the Public Wastewater System shall be obtained from Ash Creek SSD. It is the responsibility of the developer, developer's engineer, homeowner, builder, building owner or facility owner to coordinate all requests and submittals for approval. Contact with Ash Creek SSD early in the development process for all projects is encouraged.

The procedures contained in this section include the minimum requirements necessary for developing wastewater facilities in the Ash Creek SSD service area. Additional meetings, submittals, reviews, etc. may be necessary during the development process as determined by Ash Creek SSD.

2.2 Developer and/or Owner Responsibilities

As a general matter, any developer or owner who desires to construct and install any building or structure requiring sewer facilities shall, at his/her expense, be responsible to:

A. Submit to Ash Creek SSD all plans, designs, and specifications for any proposed sewer system or facilities.

B. Obtain, in the name of Ash Creek SSD and/or dedicate to Ash Creek SSD, all sewer right-of-way easements or deeds necessary for construction, installation, and maintenance of sewer facilities.

C. Obtain approval from Ash Creek SSD and any other governmental entity having control or jurisdiction over any matter related to construction, installation, and maintenance of sewer facilities.

D. Pay all impact fees, plan review fees, inspection fees, monthly fees, and all other fees required by Ash Creek SSD's Rules and Regulations.

E. Construct and install approved sewer facilities in accordance with Ash Creek SSD's Rules and Regulations.

F. Where required, enter into an agreement for private maintenance, repair, and replacement of sewer facilities.

    1. Examples where a private sewer agreement may be required are RV parks, private parcels, and developments with private roads or streets not dedicated to the City.

    2. Example "Private Sewer Agreement" available from Ash Creek SSD upon request.

G. Where required, dedicate and convey completed sewer facilities to Ash Creek SSD at no cost to Ash Creek SSD.

H. An owner of any property where a sewer main line is installed on private property shall dedicate an adequate easement or sign a private sewer agreement.

2.3 Public Wastewater System Extensions and Modifications

The general procedure for obtaining approval of a proposed wastewater system extension or modification is as follows:

2.3.1 Service Provider Letter

A. The Developer may be required to obtain a "Will Serve" letter from Ash Creek SSD during the planning process to demonstrate that Public Wastewater Service is available to a Project.

B. Developer shall submit a copy of a proposed preliminary plat, site plan, or proposed master plan for large, multi-phase developments showing the property or area for which sewer service is desired and shall request a "Will Serve" letter from Ash Creek SSD.

    1. Submittals shall be in the form of PDF electronic files. A full-size paper copy may also be required at the discretion of Ash Creek SSD.

C. Ash Creek SSD shall issue or deny issuance of a "Will Serve" letter, depending on the location of the property or area to be served, and the sewer main line capacity and treatment capacity as determined by the Board.

2.3.2 Design

A. Developer and the Project Engineer shall prepare and submit preliminary design drawings and specifications in accordance with Ash Creek SSD's Rules and Regulations.

    1. Submittals shall be in the form of PDF electronic files. A full-size paper copy may also be required at the discretion of Ash Creek SSD.

B. The Developer shall provide all necessary deeds or right-of-way easements.

C. Developer's Engineer shall submit to Ash Creek SSD engineered drawings along with plan review fees or other required fees. Plan review fees shall be $25.00 per lot or ERU. In areas not within Hurricane, LaVerkin, Toquerville, or Apple Valley there is an additional $400.00 per lot or ERU fee.

D. Ash Creek SSD shall review all preliminary design drawings, plans and specifications, provide "red-lined" drawings and give feedback for any issues that need to be addressed.

E. Developer and the Project Engineer shall prepare final design drawings by making corrections and addressing issues contained in the preliminary design review. An additional plan review by Ash Creek SSD may be necessary.

F. Ash Creek SSD, if all corrections are made, issues addressed, and plan review fees paid shall give approval for said plans and specifications by signing the plans and specifications. Self-adhesive or add on labels, certifications, details, etc. are not acceptable on final plans.

G. The Developer or Project Engineer shall make copies of the Approved Construction Drawings, with copies being distributed at the preconstruction meeting. A PDF electronic file of the Approved Construction Drawings should also be provided to Ash Creek SSD.

H. Proposed modifications to the Approved Construction Drawings, plat or final site plan shall be submitted to Ash Creek SSD for review and approval prior to incorporation into the project.

2.3.3 Construction and Inspection

A. Ash Creek SSD shall give written approval, either by separate letter or by signing the plans and specifications, for developer to proceed with construction and installation of sewer lines and facilities.

B. After all submittals are approved, a Preconstruction Meeting shall be held.

C. The Contractor shall construct the project according to the Approved Construction Drawings.

D. Developer shall give Ash Creek SSD two working days' (48 hours) notice before commencement of construction or installation of sewer lines and facilities.

E. Verbal acknowledgment of notification from Ash Creek SSD will be required before excavation.

F. An Ash Creek SSD Inspector will conduct periodic inspections, preliminary inspection, and final inspection of the project.

2.3.4 Final Project Approval

A. The Developer shall request Final Project Approval of the completed wastewater system improvements.

B. The following items require completion, submittal, and/or approval by Ash Creek SSD prior to requesting Final Project Approval.

1. Completion and approval of all final inspection "punch list" items.
2. Submittal and approval of passing acceptance test results.
3. Submittal and approval of Record Drawings.
4. Submittal and approval of Operation and Maintenance Manuals, if applicable.
5. Submittal and approval of all executed easements and special agreements required for the project.
6. Payment of all fees.
7. Final Project Approval of the downstream Public Wastewater System by Ash Creek SSD.

C. Upon completion of construction and installation of sewer lines and facilities in accordance with Ash Creek SSD's Rules and Regulations, Ash Creek SSD's Superintendent shall issue "Notice of Final Inspection" or other letter accepting the sewer lines and facilities as completed.

D. Developer shall transfer and convey the sewer lines and facilities to Ash Creek SSD at no cost to Ash Creek SSD.

2.3.5 Warranty Period

A. The warranty period for Developer Sponsored Projects shall extend to the latter of one year from the date of Final Project Approval or the date when all warranty “punch list” items are completed and approved by Ash Creek SSD.

B. During the warranty period, the Developer shall remain responsible for problems due to defects in materials and workmanship (this also includes elimination of infiltration and inflow) and correcting incomplete or incorrect information on the Record Drawings.

C. Toward the end of the warranty period, Ash Creek SSD will perform a project warranty inspection which will include a video inspection of the installed wastewater system by Ash Creek SSD personnel. A warranty inspection letter with a "punch list" of deficient items will be issued and sent to the Developer, the Project Engineer, and the Contractor.

D. Upon satisfactory completion of the warranty inspection "punch list" items by the Developer, as verified by Ash Creek SSD Inspector, and at the expiration of the warranty period, the warranty period shall be complete.

E. Should the warranty inspections reveal necessary repairs or replacement of wastewater system components the new system will be subject to an additional one-year warranty for said repairs.

2.4 Requirements of Other Public Agencies

The requirements for the design, construction, and installation of sewer facilities, as specified herein, shall be in addition to and shall be deemed supplemental to the requirements of any other rules and regulations of any other governmental entity or public agency having jurisdiction or control over any aspect related to the approval, construction, installation, and maintenance of such sewer facilities. Any person or entity who undertakes the preparation of plans and specifications for the construction and installation of a sewer system shall be charged with the knowledge of such rules and regulations and shall be required to comply with the same.

3.0 PLAN DESIGN AND REVIEW

3.1 General

The developer, at his/her expense, shall be responsible to design all sewer facilities in accordance with all Ash Creek SSD Rules and Regulations and Ash Creek SSD's Capital Facilities Plan. The Developer shall submit all plans and specifications for review and approval by Ash Creek SSD.

The design of Public Wastewater System extensions or modifications shall include the submittals and required information described in this Section. The procedures for submitting the information and receiving approval are contained in Section 2.0 Development Procedures.

3.2 Construction Drawings

Complete and detailed construction plans, drawings of improvements, and all necessary reports shall be submitted to Ash Creek SSD for review and acceptance. All Drawings or prints shall be clear and legible and conform to standard engineering and professional drafting practices. All Drawings or prints shall be in compliance with individual City requirements and include any additional information as required by the Joint Utility Committee (JUC).

A. Format:
   Wastewater system plans and specifications submitted to Ash Creek SSD shall be in the following format:

   1. Size: the standard drawing size shall be twenty-four by thirty-six inches or digital PDF file.

   2. North arrow included.

   3. Scale: Standard engineering scales shall be used. Uncommon scales generated by CAD systems shall not be used. Whenever possible, profile scale shall be 1" = 10', 20' or 40' horizontal and 1" = 5' vertical.

   4. Stationing and elevations for profiles: Profiles should be drawn directly below plan view when possible. Benchmarks and elevations must be referenced to latest revision of USGS datum or other datum as may be approved.

B. Information to be included:

1. Site Location Map. The proposed project shown on a vicinity map indicating adjacent streets, projects, etc.

2. Topographic Map. A topographic map of the area to be provided with wastewater service. This information may be included on the wastewater system layout plan.

3. Wastewater System Layout. Plan of the proposed project indicating the following items with appropriate labeling:
    a. The proposed location for connection of the proposed wastewater system improvements or extensions to the existing Ash Creek SSD wastewater collection system.
    b. Location of the proposed wastewater system improvements in relation to streets, property lines, lots, other existing and proposed utilities, etc.
    c. Proposed public wastewater collection lines and manholes, private laterals, and other wastewater system features.
    d. Lots or proposed facilities that may require ejector pumps for wastewater service, if applicable.
    e. Proposed Low-Pressure Sewer System facilities with appropriate design calculations, if applicable.
    f. Proposed wastewater pump stations, force mains and appurtenances with appropriate design calculations, if applicable.

4. Plan and Profile View Sheets shall include all proposed and existing utility lines, existing ground surface and proposed street grade, existing and proposed sewer lines, laterals, and street cross section with all utilities listed, with the flowline plotted in the profile, and slope indicated between each vertical point of intersection.

5. Existing and proposed easements shown with type (i.e., temporary, permanent, nonexclusive utilities, sewer, water, access) and recording information indicated.

6. Ash Creek SSD General Sewer Notes.
    a. See Appendix C for a list of General Sewer Notes that must be included on each plan set.

7. Ash Creek SSD Detail Sheets
    a. Applicable Ash Creek SSD Detail Sheets as contained in Appendix D must be included.

C. Wastewater Utility Location

1. Wastewater lines should be located at least five (5) feet North or West of the road centerline with a minimum of five (5) feet of distance to the toe of curb and gutter from the sidewall of the manhole barrel.

D. Wastewater Utility System

Plan and Profile View sheets should include the following. Ash Creek SSD may require additional information as it deems necessary.

1. Manholes
    a. Include location, depth, diameter, rim elevation, and invert elevations.
    b. All manholes should be numbered, and stationing included.
    c. Polymer manholes should be labeled.

2. Pipes
    a. Flowline plotted including depth, size, slope, length, stubs, and clearance at all pipe crossings.
    b. Pipe material.

3. Laterals and Cleanouts
    a. Private lateral wastewater lines to all lots or building units shown.
    b. Include location, size, slope, and material.

3.3 Plan Review Submittal

A. The following shall be submitted as part of the Residential Development first plan review:

1. Sewer Plans
2. Street Plans
3. Storm Drain Plans
4. Grading Plans
5. Erosion Control Plans
4. Easements, Documents and Plats
5. For phased projects, map of overall plan for sewer and water, including size and type of lines.
6. Appropriate Survey Notes

B. The following shall be submitted as part of the Commercial/Industrial Development first plan review:

1. Items listed in Section A above if applicable.
2. Site plan/plot plan with water, sewer, and fire systems shown.
3. Building floor plan/plumbing plan.
4. Completed Ash Creek SSD industrial form with pretreatment data. See Appendix A for form.
5. Submittal of data indicating typical waste discharge contents.
6. Calculation of number of units.
7. Grease trap/industrial waste clarifier sizing calculations.
8. Square footage of the building by use type.
9. Water usage of a similar type of installation.
10. For restaurants and bars: number of seats, daily meals and/or peak hour meals.

3.4 Easements

The developer shall be responsible to obtain all right-of-way easements or deeds necessary for the construction, installation, and maintenance of sewer facilities. In connection therewith, Developer shall submit for review and approval a proposed subdivision plat, or, if said right-of-way easement is not a part of a subdivision, a proposed Right-of-Way Easement Agreement and map, which contains the following:

A. Required information:

1. a physical address for the property in which the easement is written
2. north arrow (orientation to upper half of plat)
3. scale
4. track numbers
5. lot numbers
6. lot lines
7. ownership lines
8. sections corner
9. street R/W and street names
10. section, township & range and base & meridian Data
11. call out of easement
12. parcel numbers
13. dimensions
14. title block
15. drawing number
16. Ash Creek SSD signature block

B. Additional Information When Bearings are Used:

1. basis of bearings
2. T. P.O.B. (True Point of Beginning)
3. bearing and distances
4. curve data
5. designated point
6. existing easement data

C. Additional Right-of-Way Easement Requirements:

1. All sewer right-of-way easements shall be obtained in the name of Ash Creek SSD, as Grantee, or shall be assigned to Ash Creek SSD.

2. All right-of-way easements shall contain legal description of the desired right of way which is prepared by a licensed surveyor.
3. Unless otherwise approved by Ash Creek SSD, all main sewer lines and related facilities must be located in public roadways, or, if approved by separate written agreement, in utility corridors which are dedicated to the use and benefit of the public.

4. Unless otherwise approved by Ash Creek SSD, construction right-of-way easements shall be 50 feet in width, and permanent right-of-way easements shall be 25 feet in width.

5. Unless otherwise approved by Ash Creek SSD, all sewer pipelines shall be installed along the centerline of the easement. For good cause shown, the pipeline may be installed no less than 5 feet from either easement boundary.

6. All easement property must be graded so that every manhole will be accessible to maintenance equipment. On a case-by-case basis, an all-weather road may be required by Ash Creek SSD.

7. All necessary sewer right-of-way easements shall be obtained and recorded at the office of the Washington County Recorder prior to construction and installation of sewer facilities.

8. No other public utility shall be permitted in the sewer right-of-way easement, except that storm drain facilities may be installed in the same easement if the minimum permanent easement width is 30 feet, and the storm drain facilities are installed in the outer-most 5 feet.

D. Right-of-Way Easements Within Subdivision Plat:

1. Where sewer right-of-way easements are included in public roadways, the plat shall contain general dedicatory language dedicating said roadway to the municipality in which it is located for the use and benefit of the public as a public roadway and to Ash Creek SSD for construction, installation, maintenance, replacement and repair of sewer lines and related facilities.

2. Except as approved by Ash Creek SSD, all sewer main lines shall be constructed in public or private streets as shown on the plat. Upon request of the developer and for good cause shown, a main sewer line may be permitted between lots, provided that a sewer corridor of at least 25 feet in width shall be provided by deed and shown on the plat as open space which is dedicated and conveyed to Ash Creek SSD.

3. Except as approved by Ash Creek SSD, laterals shall not cross property lines. Upon request of the developer and for good cause shown, a lateral may be permitted to cross an adjacent property line provided that a 15’ right-of-way easement is recorded.

4. In subdivisions or developments where sewer lines are to be constructed in private streets or upon other private property, the developer/owner and Ash Creek SSD shall enter into a written agreement satisfactory to Ash Creek SSD which, among other things:

    a. Grants to Ash Creek SSD a right-of-way easement conforming to the requirements of these rules,
    b. Requires construction and installation of sewer lines and related facilities in accordance with Ash Creek SSDs Rules and Regulations by the developer/owner,
    c. Upon request of the developer and for good cause shown, a main sewer line may be permitted between lots, provided that a sewer corridor of at least 25 feet in width shall be provided by deed and shown on the plat as open space with is dedicated and conveyed to Ash Creek SSD
    d. Provides for the ownership, maintenance, replacement and repair of sewer lines and related facilities within the development by the developer/owner, homeowner's association, or lot owners within the development, and
    e. Requires a notation on the subdivision plat giving notice to prospective purchasers and lot owners that ownership, maintenance, replacement, and repair of said lines and related facilities will be the responsibility and liability of the developer/owner, homeowner's association, or lot owners within the development.

E. Right-of-Way Easement Agreements:
A sewer right-of-way easement shall be obtained by separate Right-of-Way Easement Agreement which conforms to the requirements of these rules where:

1. Sewer facilities are to be constructed and maintained on property, which is not included in a subdivision plat, or

2. The developer desires to construct and install sewer facilities prior to the time a subdivision plat is recorded at the office of the Washington County Recorder.

3.5 Special Agreements and Permits

A. All special agreements or permits required for construction of proposed Public Wastewater System extensions or modifications shall be submitted, reviewed by Ash Creek SSD, and executed along with the final design drawings.

B. The developer shall submit documentation assuming responsibility for all costs and work associated with any third-party agreements, easements, or permits which Ash Creek SSD may be required to enter into for the project.

3.6 Construction Cost Estimate

The following construction cost estimates shall apply for Ash Creek SSD projects.

A. A construction cost estimate prepared by the Project Engineer and approved by Ash Creek SSD shall be used to establish the amount of the project and Engineering Service Fees.

B. The construction cost estimate shall include, as separate line items, the following items as applicable:

1. Wastewater main line size and type.
2. Wastewater lateral, each size and type.
3. Wastewater manholes and structures, each size and type.
4. Connection to existing manhole.
5. Acceptance testing (TV inspection, air and vacuum testing, tracer wire continuity testing, etc.)
6. Street cuts (including pavement and curb replacement).
7. Trench dike
8. Maintenance access roadway.
9. Revegetation and/or landscaping.
10. Trench rock removal (including import material replacement).
11. Existing manhole adjustment.
12. Special construction items (i.e., bypass pumping, borings, casings, dewatering, wetland restoration, temporary sewer, etc.).

C. Unit costs shall be consistent with current local construction costs and shall be acceptable to Ash Creek SSD.

3.7 Record Drawings

A. The Developer shall assure that all data for Record Drawings is collected.

B. The Record Drawing set shall consist of the approved Construction Drawings, including approved revisions, with all annotations and graphical representations modified to reflect the as-constructed condition of the Public Wastewater System improvements and Private Lateral Wastewater Lines as determined by a field survey conducted by the Project Surveyor.

C. The Record Drawing set shall include title page, overall wastewater system plan, plan and profile sheets, and special detail sheets. Landscaping plans, road cross-sections, erosion control plans, miscellaneous detail sheets, etc., which do not affect the construction or operation of the wastewater system shall not be included. Sheets not included in the Record Drawing set shall be lined-out in the drawing sheet index.

D. Sheet size shall be 24"x36".

E. Record Drawings shall be legible and scalable and must allow for clear photocopies and digital copies.

F. Record Drawings shall include all information required for final wastewater system design drawings and the following additional items:

1. Existing manholes removed as part of the project shall be shown on the record drawings with appropriate notes and how the manhole was abandoned or noted as removed.

2. Distance from the near side property line to the sewer lateral marker.

3. Any changes to sewer main line slopes and depths.

4. Any field information obtained by the contractor.

5. The location of the installed wastewater lines within easements. If revised easements are required, a copy of revised easements shall be submitted with the initial Record Drawing submittal for review by Ash Creek SSD.

6. Written certification by the Project Surveyor or Project Engineer that a field survey of existing as-constructed wastewater system information has been performed and has been incorporated into the Record Drawings.

G. A copy of the Record Drawings shall be submitted to Ash Creek SSD in PDF electronic form for review prior to scheduling a final inspection.

H. The final Record Drawing submittal shall consist of the following:

1. Signed revised easements, if required.
2. One set of plotted mylar drawings.
3. A PDF digital file of all sheets in the Record Drawing set.

I. Any incorrect or modified information shown on the Record Drawings found during the warranty period shall be corrected by the Developer and Project Engineer and the corrected sheets resubmitted.

3.8 Operation and Maintenance Manuals

A. An Operation and Maintenance Manual, prepared by the Project Engineer and approved by Ash Creek SSD, shall be required for wastewater pump stations.

B. Hard copies and a PDF digital file of the final approved Operation and Maintenance Manual shall be submitted prior to Final Project Approval of the wastewater pump station.

C. Content

1. General description of the facility and how it operates.

2. Detailed description of all components and how they function in relation to other components.

3. Operating procedures for the overall facility and for its specific components under all operating conditions.

4. Maintenance procedures and schedules.

5. Technical guidance for troubleshooting.

6. Manufacturer's recommended spare parts list and special tools list.

7. Record Drawings of the wastewater pump station and force mains showing as-constructed conditions.

8. Certified pump curves for the installed system.

9. Drawings, schematic diagrams, wiring diagrams, etc. as required to adequately describe the as-constructed facility and its components.

10. Catalog cut sheets, equipment test certifications, and other information for all components of the station. Catalog cut sheets shall be marked to indicate the specific equipment models, serial numbers, etc. included in the station.

11. Other information as required by Ash Creek SSD.

3.9 Certificate of Review

No construction of sewer improvements shall be permitted until all sewer plans and specifications have been reviewed by Ash Creek SSD and all improvements conform to these Design Standards and Construction Specifications.

4.0 DESIGN REQUIREMENTS

4.1 General

This section defines the minimum design requirements necessary for the design of wastewater facilities within Ash Creek Special Service District. It is not the intent of these design requirements to restrict professional judgment, but, rather, to serve as a guide and to establish consistency in design. Wastewater facilities and improvements proposed for inclusion into Ash Creek SSD's service area shall be designed in accordance with the criteria set forth herein, unless otherwise approved in writing by Ash Creek SSD. The design shall take into consideration physical conditions known to exist at the time and place of each installation and the probable operating requirements.

Proposed designs deviating from these requirements will be reviewed by Ash Creek SSD on a case-by-case basis upon submittal by the Project Engineer of any additional data, computations, exhibits, etc., as required by Ash Creek SSD.

4.2 Design Criteria for Public Wastewater System Extensions and Modifications

4.2.1 Basis of Design

A. Design Period

1. All sanitary sewers and appurtenances shall be designed to carry the design flows from all contiguous or adjacent areas which may, within a reasonable period in the future be tributary thereto.

2. The wastewater system design shall be based on the best information available.

B. Design Capacity

1. Peak Flow:

   Sanitary sewers must be designed to carry the peak discharge and to transport suspended material so that deposits in the sewer are precluded. Hydraulic jumps shall be avoided whenever possible. Where velocities greater than fifteen (15) feet per second are attained, special provision shall be made to protect against displacement by erosion and shock.

2. Average Flow:

    a. New sewer systems shall be designed based on an average daily per capita flow of not less than 100 gallons per day. This figure is assumed to provide for normal infiltration, but an additional allowance should be made where groundwater conditions are unfavorable. To provide for peak loads sanitary sewers should be designed to carry, when full, not less than the following:

Laterals and Sub Mains	400 gal. per capita/day
Mains, trunks, and outfall	250 gal. per capita/day

3. Future Land Use:

    a. The following sewage flow parameters shall be used as a general guideline for minimum estimated flows generated from future land use.

Future Residential Areas	1250 gal. per/acre/day
Commercial Areas	1000 gal. per/acre/day
Infiltration-inflow allowance	500 gal. per/acre/day

4.2.2 Location of Facilities

A. General Guide

The following information is provided as a general guide for laying out the wastewater main lines. This information is to be used as a guide and may be changed by Ash Creek SSD as required to meet existing utilities or to meet the cities of Hurricane, LaVerkin, Toquerville, Apple Valley and unincorporated County construction standards.

B. New Wastewater Lines

1. Wastewater lines should be located five (5) feet North or West of the road centerline with a minimum of five (5) feet of distance to the toe of curb and gutter from the sidewall of the manhole barrel.

2. New lines should be stubbed out to the property boundary to allow for future development.

3. No sewer main line should be constructed thru a water detention basin.

4.2.3 Separation from Other Utilities

Horizontal and vertical pipe separation between culinary water lines, utilities, and wastewater main lines and private lateral lines shall comply with the following requirements.

A. Horizonal Separation

1. Wastewater main lines and private laterals shall be installed a minimum of 10’ horizontally from any existing or proposed water main or service, measured edge of pipe to edge of pipe.
2. The separation of wastewater lines and private laterals from all secondary water system lines and irrigation lines shall be a minimum of 10’ horizontally, measured edge of pipe to edge of pipe.
3. The separation of wastewater lines and private laterals shall be installed a minimum of 10’ horizontally from all other utilities measured edge of pipe to edge of pipe or utility line.

B. Vertical Separation

Where wastewater main lines or private laterals must cross culinary water lines, wastewater lines shall be at least 18” below the bottom of the water line, measured edge of pipe to edge of pipe.

C. Approvals for Reduced Separation

If local conditions prevent the minimum 18” separation of wastewater lines from other utilities, reduced separation my be allowed with the following requirements:

1. The Contractor shall provide construction as required per the State Health Department Water/Sewer Special Construction Requirements.
2. Sewer mains and laterals shall be sleeved where an 18” clearance is not met or when sewer is above the water line. Sleeve shall be 20’ long centered at the water line.

D. Separation at Crossings

Wastewater main lines and private lateral lines shall be located below all existing and proposed utilities with a minimum separation of 18" for main lines measured edge of pipe to edge of pipe or utility line.

1. If local conditions prevent the wastewater lines from being located below other utilities, the wastewater line may be located over the other utilities with the following requirements:
    a. The routing is approved by Ash Creek SSD and the utility system authority. The Project Engineer may be required to submit justification for the conditions preventing this requirement from being met.
    b. A minimum vertical separation of 18" for main lines measured from edge of pipe to edge of pipe or utility line shall be maintained.
    c. Special construction shall be required whenever sewer lines cross over a water line.
2. If local conditions prevent a minimum vertical separation of 18" for main lines and for private lateral lines between the wastewater line and other utilities at crossings, reduced separation may be allowed with the following requirements:
    a. The reduced separation and routing are approved by Ash Creek SSD and the utility system authority. The Project Engineer may be required to submit justification for the conditions preventing separation to be maintained.
    b. The vertical separation shall be maximized. There shall be a minimum separation of 4”, but in no case shall the pipes be in contact.

4.3 Gravity Flow Main Lines

A. Line Size
No public sanitary sewer shall be less than 8” in diameter.

B. Line Depth

1. In general, sanitary sewers shall be designed of sufficient depth to permit floor drains from basements to be connected, unless in subdivisions or areas in which basement-less houses are to be constructed. In which instance the developer shall sign a statement to this fact on all plans presented for approval and noted on the subdivision plat which is recorded at the county office.

2. Minimum cover over sewer pipe should be sufficient to service adjacent property by gravity, and cover shall not be less than 9 feet to finish grade of street. Shallower depths will be approved on a case-by-case basis by Ash Creek SSD. Where depths

shallower than 5 ½ feet are unavoidable, a pump station or low-pressure system may be required.

3. In addition, sewer mains must be sufficiently deep in subdivisions to allow water lines to be set with 3' minimum cover without interference from sewer laterals.

C. Minimum Slope

1. Pipe slopes shall be calculated using the horizontal distance from inside manhole wall to inside manhole wall and the flow line elevations at the inside of manhole wall.

2. All sewers shall be designed and constructed with hydraulic slopes sufficient to give average daily cleaning velocities of not less than 2.0 feet per second, based on Manning's formula.

3. A Manning's "n" value of 0.013 shall be used for all pipe materials.

4. Exceptions to the requirement to achieve a velocity of not less than 2.0 feet per second shall be specifically approved by Ash Creek SSD on a case-by-case basis.

5. In all cases the minimum slope of any line segment shall not be less than the following:

Sewer Size (inches)	Minimum Slope in feet per 100 feet (%)
4"	2.00
6"	1.00
8"	0.50
10"	0.40
12"	0.35
15"	0.30
18"	0.25
21"	0.20
24"	0.15

6. Pipes larger than 24" shall be per the Design Engineers recommendation but not have a slope less than 0.10 ft/100 ft.

7. Any line segment that has any portion of the line with a slope less than the minimum shall be reinstalled.

D. Maximum Slopes

1. The maximum slope of all lines entering manholes is 35 percent or any time peak pipeline velocity is 10 feet per second.

2. In cases where the required slope from manhole to manhole exceeds 10 feet per second:
    a. The slope of the wastewater line should generally be less than 35 percent. Custom manholes will be required to meet steep pipe slopes.
    b. Special design consideration, including pipe anchoring and pipe material, shall be given to wastewater lines with slopes greater than 30 percent.
    c. Any pipe slope over 20 percent must be evaluated for peak flow velocities.

E. Alignment

1. Sewers shall be designed for uniform slope and alignment between manholes and located parallel to and at least 10 feet distant from any waterline or any other utility.

2. When one sewer joins a larger one, the invert of the smaller sewer should be sufficiently high to maintain the same energy gradient. The tops of the pipes shall be at the same elevation. (or crown of pipes match)

3. All sewers shall be designed to prevent damage from superimposed loads as well as trench loading conditions.

4.4 Manholes

A. Location

1. Manholes shall be installed at the end of each line.
2. At all changes in grade, pipe size, or alignment.
3. At all intersections.
4. At intervals not greater than 400 feet apart.
5. A minimum of five (5) feet of distance to the toe of curb and gutter.

6. With the exception of sampling manholes installed according to pretreatment requirements, manholes shall not be placed on private lateral lines.
7. All service lateral connections, 6" and larger and all sewer collection lines shall be made with the installation of a manhole.
8. Manholes shall not be buried except where approved by Ash Creek SSD. Manholes shall be raised above ground level where necessary to maintain them in farmed areas and in waterways.

B. Diameter

1. Manholes shall have a minimum inside diameter of 5’.

2. Manholes shall be 6’ in diameter where pipes are 24 inches or larger, as determined by Ash Creek SSD.

C. Manhole Fall Through (slope)

1. Flow lines of incoming and outgoing lines in manholes shall have a drop of 0.2’.

D. Pipe Size Transitions

1. Unless otherwise approved by Ash Creek SSD, junction manholes shall have the crowns (soffits) of the intersecting pipes at the same elevation where their projections intersect the manhole centerline.

E. Drop Manhole Connections

1. Drop manhole connections are not permitted.

F. Depth

1. In general, manholes shall have a 9’ depth as measured from the top of rim to the invert.

2. Manholes with a depth less than 9’ shall be approved by Ash Creek SSD.

G. Special Requirements

1. Pipe diameters 12” and greater are considered regional lines and require manholes installed on these lines to be polymer, integrated polymer lined or equivalent. A note shall be included on construction drawings indicating manholes are polymer.

2. Manholes installed in fields, well protection zones or in areas of known ground water shall have a monolithic base, double mastic at the joints, and 12-inch mastic wrap around exterior joints or equivalent. A note shall be included on construction drawings indicating such. See Appendix D for detail drawing.

H. Detail Sheet

1. All manholes shall conform to the detailed dimensions, construction details, and materials as shown on the drawing titled “Sewer Manhole” provided in Appendix D Detail Drawings.

4.5 Low Pressure Sewer Systems

A. Proposed Low-Pressure Sewer Systems and manufacturers shall be approved by Ash Creek SSD. Approved manufacturers include:

1. E/One D-Series as manufactured by Environment One Corporation.
2. Omni Grind or Omni Grind Plus as manufactured by Barnes.
3. Equivalent as approved by Ash Creek SSD.

B. Intermixing of different manufacturer’s Low-Pressure System pumps within the same Low-Pressure System shall not be permitted.

C. The layout of the Low-Pressure Sewer System shall minimize the length, number of branches, and number of connections on the Low-Pressure Sewer System. A combination of smaller Low-Pressure Sewer Systems discharging to gravity flow lines is preferable to a large and complex Low-Pressure Sewer System.

D. The design of the Low-Pressure Sewer System shall be based on the system manufacturer’s recommendations for line sizing and maximum total system head with the following minimum requirements.

1. Line Size:

   Line shall be sized to provide a minimum velocity of 2.0 feet per second while minimizing head losses through the system during system operation.

2. Maximum Total System Head:

   Maximum head shall not exceed the system manufacturer's recommended allowable head for the pump system being proposed at any point on the Low-Pressure Sewer System. Total system head consists of static (elevation) head plus accumulated friction losses through the system.

E. Detailed calculations for each branch of the Low-Pressure Sewer System, including the following minimum information, shall be required and provided to Ash Creek SSD for review.

   1. Number of units connected to the Low-Pressure Sewer System
   2. Design maximum flow
   3. Pipe size
   4. Design velocity at design maximum flow
   5. Friction losses
   6. Static (elevation) head
   7. Total head
   8. Anticipated number of simultaneous pump operations
   9. For systems with more than 1 home a verified system model shall be provided.
   10. Location and number of pipe flushing connections.

F. Minimum Line Depth:

   1. Depth shall be located below all other utilities with a minimum of 18" vertical separation, measured edge of pipe to edge of pipe, from other utilities and shall have a minimum depth of 7' from the top of the pipe to the finished grade elevation.

G. Vertical Alignment:

   1. Shall minimize the number of high and low points on the system.

   2. The connection of the Low-Pressure System to the gravity system shall be the highest elevation of the Low-Pressure System.

H. Horizontal Alignment:

1. Wastewater lines will generally be located five (5) feet North or West of the road centerline with a minimum of five (5) feet of distance to the toe of curb and gutter.

I. Connection of the Low-Pressure Sewer System main line to the gravity wastewater collection system shall occur at a manhole and shall meet the following requirements:

1. The invert of the Low-Pressure Sewer System main line shall enter the manhole 0.2’ above the invert elevation of the gravity outlet line.

2. The manhole base shall have a formed channel from the Low-Pressure Sewer System main line to the gravity outlet line to minimize disturbance of the wastewater entering the manhole.

3. The manhole shall be a polymer, integrated polymer lined or equivalent.

4. The receiving manhole shall be designed and located with consideration for proximity to existing and future residences, businesses and other facilities which may be affected by potential wastewater odors generated in the Low-Pressure Sewer System.

5. The receiving manhole shall have a vented cover and manhole odor control unit installed. Odor control unit shall be a Manhole Odor Eliminator (MOE) as manufactured by Inventive Resources Inc. or an equivalent activated carbon filter media system as approved by Ash Creek SSD.

J. Appurtenances

1. Combination air valves, junction manholes and flushing connections shall be included in the design of the Low-Pressure Sewer System. The location of these valves on the system shall be approved by Ash Creek SSD and should meet the following general guidelines.

    a. Combination air valves should be installed at intermediate system high points, at significant changes in grade where air pockets can form, and at intervals of 1,200 feet or less in long horizontal runs that lack a clearly defined high point.
    b. See Appendix D for Air Vac Valve Detail Drawing.

2. Flushing connections shall be installed at the terminal end of each main line and at other locations, as determined by Ash Creek SSD, which will facilitate operation and maintenance of the system.

3. All low-pressure sewer pipe shall be installed with tracer wire and marking tape. See Section 5.10 Miscellaneous Material.

4.6 Borings

A. Borings under roadways or other similar facilities; consisting of a bored or jacked casing pipe, a carrier pipe and appurtenances; may be approved on a case-by-case basis when an open trench installation method is not allowed by the owner of the roadway or facility.

B. Borings shall be designed in accordance with applicable City, County, State, and Federal standards and requirements.

C. Approval for the boring shall be obtained from the owner of the roadway.

D. Borings under Interstate Highways shall, as a minimum, extend from right-of-way line to right-of way line.

E. Casing pipe and carrier pipe material, size, length, and flow line elevations shall be shown on construction drawings.

F. Minimum casing diameter shall typically be 24" to allow for possible upsizing of the carrier pipe in the future, however smaller sized casings may be allowable on a case-by-case basis as approved by Ash Creek SSD.

G. Casing pipe shall meet requirements of Section 4.7 and Section 5.9.

H. Ash Creek SSD may require submittal of additional structural calculations with construction drawings.

I. The design of the boring shall allow for some variance in the installed boring line and grade.

J. Construction drawings shall require the bored portion of the wastewater line to be completed before construction of the adjacent portions of line to allow for discrepancies in alignment and grade which may occur during the boring operation.

4.7 Casings

A. Wastewater lines shall be installed inside casings when additional protection of the line is necessary as determined by the Project Engineer or Ash Creek SSD.

B. Ash Creek SSD may require submittal of additional structural and pipe loading calculations with construction drawings to determine the need for additional protection.

C. Casing pipe and carrier pipe material, size, length, and flow line elevations shall be shown on construction drawings.

D. Minimum casing diameter shall typically be 24" to allow for possible upsizing of the carrier pipe in the future, however smaller sized casings may be allowable on a case-by-case basis as approved by Ash Creek SSD.

E. The carrier pipe shall generally be the same pipe material as the connecting wastewater lines.

F. The carrier pipe shall be supported by manufactured casing spacers designed specifically for this application. Redwood skids are not acceptable.

G. Casing end seals shall be installed at either end of the casing pipe to prevent migration of water and soil along the carrier pipe.

4.8 Service Laterals

A. Description

1. Ownership, construction, maintenance, and operation of Private Lateral Wastewater Lines from the building to the Public Wastewater System line, including the connection to the Public Wastewater System Lines, shall be the responsibility of the property owner.

2. The property owner shall be responsible for cleaning, repairing, and correcting any other problem associated with sewer laterals to include services that are in roadways.

3. Under no circumstances shall roof drains, foundation drains, storm drains, or sub-drains be connected to the sanitary sewer system.

4. Only one residence, structure, building, or office shall be served by each Private Lateral connected to the public main line.

B. Location

1. Private laterals shall be installed 25 feet off from the low side property line.

2. All laterals shall extend 15 feet in back of the curb and/or 10 feet from back of the property line, shall extend behind all other utilities, shall be stubbed 3 feet above surface grade and protected with a t-post. See Appendix D Sewer Service Connection Detail.

3. All laterals shall be constructed a minimum distance of 10 feet from existing water services and other utilities.

C. Gravity Flow Lateral Lines

1. Line Size shall be a minimum of 4” in diameter. Larger diameters will require the installation of a sewer manhole.

2. Minimum Slope: In no case shall any private lateral be constructed at less than 2 percent slope.

3. Alignment:
    a. Private laterals shall be designed on straight horizonal and vertical alignments and not less than a 90-degree angle to the main line, unless approved by Ash Creek SSD.
    b. No more than one 45-degree angle in 3 feet and no more than two 45-degree angles without a cleanout.

D. Cleanouts

1. Cleanouts shall be installed on all gravity flow Private Lateral Wastewater Lines according to the following requirements:
    a. A minimum of one cleanout shall be required on each gravity flow private lateral line.
    b. Cleanouts shall be constructed at or near property line and within 5’ from the building foundation when houses are built.

c. Cleanouts shall be installed or placed in such a manner so that the lateral can be located by lateral maps or sewer monument cover (metal detector).
d. Cleanouts shall be placed before any turns in the line and at intervals of not more than 100' measured from the entrance to the cleanout, along the lateral, to the next cleanout or the wastewater main line.
e. A cleanout shall be provided at the property line.
f. Cleanouts shall have the same diameter as the private lateral to which it connects.
g. See Appendix D "Sewer Cleanout W/Lid" and "Sewer Service Connection" Detail Drawing Sheets.

E. Pressure Private Lateral Lines/Sewage Ejectors:

1. In some extreme circumstances, the ability to service an individual lot by gravity may be uneconomical based on shallow depths of the mainline sewer. The definition of these circumstances shall be determined by Ash Creek SSD. Should Ash Creek SSD determine these conditions exist for a lot, and upon Ash Creek SSD approval, a pressure private lateral or an individual sewage ejector may be used.

2. The ejector shall be constructed to U.P.C. International Plumbing Code standards on private property by the property owner or developer. Maintenance of the pressure private lateral or ejector shall be the responsibility of the property owner.

4.9 Pretreatment Requirements

A. The property owner is responsible for installation, maintenance, and upkeep of any pretreatment requirements.

B. A sanitary sewer survey will be required to determine if a business will be permitted to discharge. See Appendix A for Pretreatment Survey form.

1. Businesses that fall under specific pretreatment categories will be required to retain, treat, store, and dispose of waste independently.

C. A grease interceptor, oil separator or sand interceptor, located outside the facility or building, shall be provided as part of the Private Sewer Lateral line of any commercial, industrial, and institutional facility or building that has the potential of introducing substances that would be detrimental to the Ash Creek SSD Collection or Treatment System as determined by Ash Creek SSD.

D. All wastewater from FOGS-bearing (fats, oils, and grease) fixtures must be routed to the interceptor. All wastewater from floor drains, trench drains, mop sinks and hand washing stations must be routed to the interceptor. Sanitary waste shall be excluded from the interceptor but tied in at the sampling manhole.

E. The working capacities of interceptors connected to Ash Creek SSDs wastewater system shall be at least 1000 gallons and 3 bay.

F. Sampling Manhole:

    1. A sampling manhole is required downstream of all Grease and Sand/Oil Interceptors.

    2. The facility sanitary sewer shall also discharge to the sampling manhole.

G. Impact fees will need to be paid to Ash Creek SSD based on business type and square footage.

H. See Appendix D "Grease and Sand Interceptor" Detail Drawing.

4.10 Onsite Wastewater Systems

A. Onsite Wastewater Systems or "Septic Systems" must comply with Utah Administrative Code R317-4, Southwest Utah Public Health Department's Onsite Wastewater Regulations, and Ash Creek SSD Rules and Regulations. See Section 1.2.3.B of these Standards and Ash Creek Special Service District Rules of Operation Part IV.

    1. Conventional onsite wastewater systems shall:
        a. Comply in all respects with the septic system densities of the Hansen Allen Luce Study
        b. Be shown by an engineering report to have no negative effect on groundwater quality, or
        c. Be exempt from the Hansen Allen Luce Study.

B. For any Large Underground Wastewater Disposal (LUWD) System where Ash Creek SSD will be designated Body Politic, the following requirements shall be meet:

    1. Must comply with Utah Administrative Code R317-5, Southwest Utah Public Health Department's Onsite Wastewater Regulations, and Ash Creek SSD Rules

and Regulations. See Section 1.2.3.B of these Standards and Ash Creek Special Service District Rules of Operation Part IV.

2. A System Design Report shall be submitted by the Project Engineer to Ash Creek SSD for review and approval. The report shall contain design criteria along with other information necessary to describe the proposed project and demonstrate project feasibility. The Report shall include a completed copy of the Southwest Utah Public Health Department's "Onsite Wastewater System Subdivision Feasibility Application". It is the responsibility of the Project Engineer to ensure the report meets all requirements of Utah Administrative Code R317-5.

3. Construction drawings for the Development including sewer and the LUWD System shall be submitted for review, redline comments and approval by Ash Creek SSD.

4. After all redline comments have been addressed and Ash Creek SSD has approved the construction drawings, Ash Creek will submit construction drawings and the System Design Report to the Utah Department of Water Quality (DWQ) for comments and approval.

5. No construction shall begin until comments from DWQ have been addressed and plans have been approved.

6. The Developer or project owner shall execute a Body Politic Agreement with Ash Creek SSD prior to completion of the LUWD System construction.

4.11 Wastewater Pump Stations

A. See Section 7.0 Wastewater Pump Stations.

4.12 Force Mains

A. See Section 7.3.2.H Force Mains.

5.0 MATERIAL REQUIREMENTS

5.1 General

A. Minimum Requirements

1. The material requirements contained in this Section include the minimum requirements necessary for construction of wastewater facilities in the Ash Creek SSD area.

2. Contractor shall submit material cut sheets and specifications for proposed materials to demonstrate compliance with Ash Creek SSD Standards.

3. Materials proposed for incorporation into the work that do not conform to these specifications shall require written approval by Ash Creek SSD prior to delivery to the job site.

4. Any material or equipment not conforming to the Approved Construction Drawings and/or these Ash Creek SSD Standards or has not received prior written approval by Ash Creek SSD shall be removed from the project site at the expense of the owner/contractor.

B. Use of Materials

1. All materials and equipment furnished for permanent installation in the work shall be new, unused, and undamaged when installed or otherwise incorporated in the work.

2. No material or equipment shall be used by the contractor for any purpose other than that intended or specified.

5.2 Gravity Pipe

A. Acrylonitrile Butadiene Styrene (ABS) Pipe:

1. Ash Creek SSD does not permit the use of ABS Pipe.

B. High Density Polyethylene (HDPE) Pipe

1. HDPE pipe is permitted under the following conditions:

a. Installation is at a water well protection zone.
b. Installation meets state and local standards.

2. Materials: Virgin resins, Cell Classification meeting or exceeding PE 345464C as defined in ASTM D 3350, resins shall be listed by the Plastic Pipe Institute in its pipe-grade registry TR-4.

3. Pipe and Fittings:
    a. ASTM Material Designation Code: PE 3608/3408 or PE 4710 high density, extra high molecular weight.
    b. SDR 17 in accordance with ASTM F 714.
    c. Outside diameter to be ductile iron pipe size (DIPS) or iron pipe size (IPS).
    d. Marked in accordance with ASTM F 714.
    e. Pipe shall be manufactured with an integral color-coded stripe of HDPE, color green.

4. Fittings for Private Lateral Lines:
    a. No molded HDPE fittings will be allowed.
    b. 45-degree bends shall be fusion welded seamless long radius HDPE sweep bends, or fusion welded 3 segment fabricated HDPE fittings.
    c. Wyes for cleanouts shall be fabricated fusion welded fitting.
    d. The SDR of the fitting shall match the SDR of the adjoining pipe.

5. Joints:
    a. Zero leak-rate heat-fusion joint conforming to ASTM D 3261.
    b. HDPE gravity lines 8” and larger shall have the internal bead resulting from the heat-fusion process removed and extracted from the pipe during the cooling stage of the fusion process.
    c. The bead removal process shall be in accordance with the bead removal equipment manufacturer’s specifications.
    d. The extracted fusion bead shall be subjected to visual inspection and verification per Section 6 Construction Requirements.

C. Polyvinyl Chloride (PVC) Pipe

1. Material: PVC plastic having a cell classification of 12364 or 12454 as defined in ASTM D1784

2. Pipe:
    a. 4" thru 15" diameter: ASTM D 3034, SDR-35.
    b. 18" thru 48": ASTM F 679 (Large diameter solid wall), SDR-35.
    c. Minimum pipe stiffness shall be 46 psi when tested in accordance with ASTM D 2412.
    d. For depths and loads exceeding the minimum 46 psi then 115 psi pipe stiffness shall be used in accordance with ASTM D 3034, SDR-26.

3. Fittings:
    a. Gasketed sewer fittings conforming to ASTM F1336.
    b. Solvent weld PVC fittings meeting ASTM D3034 may be used on 4" and 6" private laterals. Gasketed fittings shall not be used for solvent welding.

4. Joints:
    a. Integral bell gasketed joints conforming to ASTM D3212. Rubber gaskets shall be factory installed and conform to ASTM F 477.
    b. Joints on 4" and 6" diameter pipe may be solvent weld joints conforming to ASTM D 2855. A purple primer conforming to ASTM D 656 and solvent cement not purple in color and conforming to ASTM 2564 shall be used.
    c. Pipe lengths shall not be greater than 20 feet.
    d. PVC pipe meeting requirements of ASTM D 1785, Schedule 40 or Schedule 80, with equivalent gasketed or solvent weld fittings, may be used for 4" and 6" Private Lateral Wastewater Lines.

D. Polyvinyl Chloride (PVC) AWWA C900 Pipe

1. Material: PVC plastic having a cell classification of 12454 as defined in ASTM D1784

2. Pipe:
    a. Meets the requirements of the ANSI/AWWA C900 standard specification of polyvinyl chloride water distribution pipe.
    b. DR-18 or less

3. Joints:
    a. Restrained gasketed joints required.
    b. The integral bell joint system meets the requirements of ASTM D3139 and utilizes an elastomeric seal meeting the specification defined in ASTM F477.

5.3 Pressure Pipe

A. High Density Polyethylene (HDPE) Pipe

1. HDPE pipe is permitted under the following conditions:
    a. Installation is at a water well protection zone.
    b. Installation meets state and local standards.

2. Materials: Virgin resins, Cell Classification meeting or exceeding PE 345434C as defined in ASTM D 3350, resins shall be listed by the Plastic Pipe Institute in its pipe-grade registry TR-4.

3. Pipe and Fittings:
    a. ASTM Material Designation Code: PE 3608/3408 or PE 4710 high density, extra high molecular weight.
    b. 4” thru 12" diameters. SDR and Pressure Class shall be based on specific requirements of installation with minimum SDR 11 and Pressure Class 160 in accordance with ASTM F 714.
    c. Outside diameter to be ductile iron pipe size (DIPS) or iron pipe size (IPS).
    d. Marked in accordance with ASTM F 714.
    e. Pipe shall be manufactured with an integral color-coded stripe of HDPE, color green.

4. Joints: Zero leak-rate heat-fusion joint conforming to ASTM D 3261.

5. Thrust Blocking: Appropriate thrust blocking, designed specifically for the pressures and soil conditions encountered, shall be installed at all fittings.

B. Polyvinyl Chloride (PVC) Pipe

1. Material: PVC plastic having a cell classification of 12454 as defined in ASTM D1784.

2. Pipe and Fitting.
    a. 4" thru 12" diameters: AWWA C900. DR and Pressure Class shall be based

on specific requirements of installation with a DR of 18 or less and Pressure Class 150.

3. Joints.
    a. 4" thru 12" diameters. Integral-bell gasketed joints conforming to ASTM D31339. Rubber gaskets shall be factory installed and conform to ASTM F 477.

4. Fittings: ANSI A21.10. Fittings shall be consistent with the specified pipe.

5. Thrust Blocking: Appropriate thrust blocking, designed specifically for the pressures and soil conditions encountered, shall be installed at all fittings.

5.4 Manholes

A. General

1. Manholes shall be watertight and shall be constructed with precast reinforced cementitious concrete or polymer concrete bases, wall and cone sections, thermo-plastic riser form, and castings.

2. Steps shall be removed in all manholes.

3. Cast-in-place concrete bases will generally not be allowed, and if allowed only for connection of new main lines to existing main lines where the use of a precast concrete base is not practical, as specifically approved by Ash Creek SSD.

B. Precast Concrete Bases

1. Shall conform to ASTM C 478 and standard detail "Sewer Manhole" in Appendix D. Shall consist of a monolithically cast precast base section with invert and shall be supplied with a flexible pipe connector for each pipe entering the manhole.

2. Invert
    a. An invert shall be provided for each pipe, including private laterals, entering the manhole.
    b. Inverts shall be full depth. The cross-sectional shape of the invert shall be uniform for the entire length and shall match the lower halves of the inflow and outflow pipe up to the spring line of the pipe and shall be vertical from the spring line to the top of the pipe.

c. In certain situations, extra depth of the channel may be required to contain the wastewater flow in the channel.
d. If a change in pipe diameter occurs at the manhole, crowns of pipes shall match and a smooth transition from one size to the other shall be provided.
e. The invert shall have a uniform grade from inflow to outflow pipe flow lines with no areas of flat or reverse grade.
f. Changes in flow direction shall be smooth and uniform. Short radiuses or abrupt changes in direction will not be allowed.
g. The junction where the pipe abuts the invert shall be manufactured specifically for the type of pipe connecting to the manhole such that the flowline of the pipe matches the flowline of the invert.
h. The junction shall be constructed so that the distance from the inside of the manhole wall to the end of the pipe when installed is 5" for HDPE pipe and 3" for all other pipe material.
i. Minimum clear distance between two wall penetrations shall be 6 inches. Minimum clear distance between wall penetration and joint shall be 3 inches.
j. A 0.2-foot drop through manhole as required by Section 4 Design Requirements.

3. Private Lateral Wastewater Line connections to Precast Base:
   a. Private Lateral Wastewater Line connections to manholes are only allowed for 6” diameter and larger lines as specifically approved by Ash Creek SSD. 4” lateral connections to the public wastewater system shall be according to Section 4.8.
   b. If allowed, Private Lateral Wastewater Line connections to pre-cast bases shall meet the requirements for flexible pipe connector and inverts listed above.
   c. In addition, the elevation of the lateral line entering a manhole shall be at or above the spring line of the main line.
   d. If allowed, the number of Private Lateral Wastewater Lines connecting directly to each manhole shall be limited to two (2). Exceptions shall be as approved by Ash Creek SSD.

4. Steps: Shall be removed.

C. **Cast-in-Place Concrete Bases**

1. If approved by Ash Creek SSD, Cast-in-Place Concrete Bases shall conform to standard detail "Cast-in-Place Manhole Base" in Appendix D and applicable

portions of ASTM C 478 and shall include a precast wall section with a cast-in-place invert. Typical 5 bag mix.

2. The cast-in-place concrete base shall be located at the approximate midpoint of an individual pipe section on the existing main line in order to avoid including a joint of the existing pipeline within the new manhole base.

3. The material around the existing pipe shall be removed to a level that is a minimum 12" below the bottom of the pipe extending radially from the center of the new manhole a sufficient distance to allow for placement of bedding material and concrete as discussed below.

4. The existing pipe shall be adequately supported to prevent settlement or damage.

5. A minimum 6" depth of compacted bedding material shall be placed to provide a level subgrade for the cast-in-place base.

6. The initial precast wall section shall be supported on concrete blocks and adjusted to proper alignment and grade prior to pouring the invert. The concrete blocks shall be positioned to not interfere with the coring of the base for placement of the new pipe and shall not be exposed in the finished manhole base.

7. The precast wall section may have “doghouse” cutouts to span the existing pipe.

8. The precast wall section shall not bear directly on the existing pipe.

9. Adequate separation between any part of the precast wall section and the pipe shall be provided to allow for placement of the pipe to manhole adapters and to provide a minimum 3" thickness of concrete between the pipe and the wall section.

10. Prior to placing the concrete, the outside of the existing pipe shall be cleaned and pipe to manhole adapters (2 per side), located at each outside manhole wall, shall be installed on the existing pipe.

11. Prior to placing the concrete, a circular form extending from the prepared subgrade to a minimum 6" above the top of the highest pipe entering the manhole shall be installed and anchored. The form shall be a minimum 12" greater in diameter than the outside of the manhole section wall and shall be located concentric with the manhole section.

12. The cast-in-place invert shall be a continuous pour of Class 4000 concrete and shall meet the following requirements.
    a. Concrete shall be a minimum 8" in thickness below the bottom of the existing pipe and the bottom of the precast manhole wall section and shall extend a minimum 6" radially, measured from the outside of the precast manhole wall section.
    b. The concrete on the outside of the manhole shall extend a minimum 6" above the top of the highest pipe that will connect to the manhole and shall be level for the full circumference of the manhole.
    c. The concrete on the inside of the manhole shall extend to the top of the highest pipe that will connect to the manhole.
    d. The concrete shall be formed around the existing pipe to provide an invert in the manhole. The bottom half of the existing pipe will remain in place to form the bottom of the invert. The concrete above the existing pipe shall be formed to provide a uniform channel with vertical sides that matches the diameter of the pipe from spring line to the top of pipe.
    e. In certain situations, extra depth of the channel may be required to contain the wastewater flow in the channel.
    f. After the cast-in-place base has been completed and cured for a minimum of 48 hours and after the wall section, cone and casting have been placed and tested, the top half of the existing pipe shall be removed to within 3" of the manhole wall in the length of the pipe and to the spring line of the pipe in the width.
    g. Rough edges of the pipe and concrete thus exposed shall be ground smooth and, if necessary, grouted with epoxy grout in such a manner as to produce a smooth and acceptable finish.
    h. Any gaps at the interface of the precast wall section and the cast-in-place concrete due to concrete shrinkage shall be grouted or sealed as directed by Ash Creek SSD.
    i. A 0.2-foot drop through manhole as described in Section 4 Design Requirements.

13. Connections of new pipe to Cast-in-place manholes:
    a. After invert has been poured and cured, the cast-in-place base shall be core drilled at the design elevation to accept a flexible pipe connector and to form a full depth invert for the new pipe.
    b. A flexible pipe connector shall be installed in the core drilled base to provide a watertight seal.
    c. Installation of pipe in flexible pipe connectors shall be per manufacturer's recommendation.

d. Additional forming of the core drilled invert by chipping and grouting may be required to provide a smooth transition to the existing invert.
e. Core shall be 0.2 foot higher than existing flowline and/or crowns of pipe shall match.

14. Private Lateral Wastewater Line Connections to Cast-in-Place Base:
    a. The connection of Private Laterals to cast-in place bases shall meet the requirements listed in item number 13 above.
    b. In addition, the elevation of the Private Lateral line entering a manhole shall be at or above the spring line of the main line.

15. Any portion of the existing line damaged shall be repaired or replaced by the contractor as approved by Ash Creek SSD.

16. Debris and construction material shall not be allowed to enter the existing wastewater system.

17. If debris and construction material does enter the existing wastewater system the Contractor shall be responsible for removal of the material, as approved by Ash Creek SSD.

D. Manhole Sections

1. Precast reinforced concrete conforming to ASTM C 478.

2. Joints: Tongue and groove type specifically designed for type of joint sealant material being used.

3. Lifting Insert: Designed to not extend completely through section wall with a minimum 3/4" cover from inside of wall.

4. Steps: shall be removed.

5. Precast base sections shall be monolithically poured.

6. Cone sections shall be of the eccentric type, excepting polymer manholes. The flat side of an eccentric cone shall be aligned above the primary outlet.

7. Concrete base, barrel riser sections and cones shall be uniform and provided by a single manufacturer.

E. Grade Rings

1. Grade rings shall only be used as a component of the adjustment of frame and cover to final grade when specifically approved by Ash Creek SSD. Standard adjustment shall be accomplished with a Thermoplastic Riser Form or Whirlygig manhole risers. If approved, grade rings shall meet the following requirements.

2. Grade rings shall be expanded polypropylene grade rings, "Pro-Ring™" as manufactured by Cretex Specialty Products or approved equal, installed per manufacturer's specifications.

3. The joints between the grade ring and cone, between grade rings, and between the grade ring and Thermoplastic Riser Form shall be sealed with M-1 Structural Adhesive/Sealant as manufactured by Chem Link or approved equal per manufacturer's instructions.

4. Designed to meet H-20 live loading.

5. Sizes: 6" height only.

6. Concrete grade rings shall not be used.

7. Manhole sections shall be required to meet 16" max ring adjustment.

F. Thermoplastic Riser Form

1. Thermoplastic riser form: As manufactured by Whirlygig® or approved equal.

2. Sealant for Thermoplastic riser: One-compound, all purpose, polyurethane sealant. Sikaflex® Construction Sealant as manufactured by Sika Chemical; Dynatrol®I-XL as manufactured by Pecora Corporation or approved equal.

G. Prohibited Manhole Adjustment Materials

1. Brick, block, rocks, wood, metal or plastic shims and all other similar material shall not be used for adjustment of frame and cover to final grade. Standard adjustment shall be accomplished with a Thermo-plastic Riser Form or Whirlygig trimmed to allow the frame to sit firmly on the form without any further adjustment.

H. Flat-Slab Lid

1. Precast reinforced concrete conforming to ASTM C 478.

2. Designed to meet H20 live loading.

3. Joints: Tongue and groove type compatible with manhole sections and specifically designed for type of joint sealant being used.

4. Allowed only on 5-foot diameter or larger manholes or on manholes meeting the requirements of standard detail “Shallow Manhole” in Appendix D.

5. Opening for casting on 5 foot or larger diameter manholes shall be offset to align over the primary outlet.

I. Frame and Cover

1. Standard Frame and Cover.
    a. Cast iron conforming to ASTM A48 Class 35B.
    b. Combined minimum weight of 400 pounds with the cover approximately 150 pounds and the frame approximately 250 pounds.
    c. Frame.
        1. Shall be of the cone construction, D&L Supply A-1180 series or approved equal.
        2. Shall not have slots for dust pans.
        3. Low profile frames are not allowed.
    d. Cover.
        1. 24 3/4" in diameter, vented with closed pick hole for removal.
        2. Low profile crosshatch pattern, D&L Supply A1181-10, or approved equal.
        3. Marked "Ash Creek Special Service District".

2. Oversized Frame and Cover.
    a. Shall be used on manholes connecting to pipelines 27" diameter and greater.
    b. Cast iron conforming to ASTM A48 Class 35B.
    c. Combined minimum weight of 422 pounds.
    d. Frame.
        1. Shall be of the cone construction, D&L Supply A-1353 or approved equal.
        2. Shall not have slots for dust pans.

        3. Frames with flat slab construction are not allowed.
    e. Cover.
        1. 30" in diameter, vented with closed-pick pick hole for removal.
        2. Low profile cross hatch pattern, D&L Supply A-1361 or approved equal.
        3. Marked "Ash Creek Special Service District".

3. See Appendix D for Detail Drawing.

4. Odor Control Units.
    a. Cover shall have standard 12 holes for venting if required.
    b. Manhole Odor Eliminator (MOE) as manufactured by Inventive Resources Inc. or approved equal activated carbon filter media system.

5. Metal Adapter Rings (Risers)
    a. Shall only be allowed for adjusting the top of frame elevation on existing manholes for pavement overlays as approved by Ash Creek SSD.
    b. Shall not be allowed on manholes constructed as part of a new development project.
    c. The maximum depth of adapter rings shall be 4".
    d. The maximum number of adapter rings shall be 2.
    e. D&L Supply G-2088 thru G-2093, Olympic Foundry or approved equal.
    f. Shall not have slots for dust pans.
    g. Shall include 4 set-screws to anchor ring to existing frame.
    h. Shall be compatible with the existing frame being adjusted.

J. Manhole Steps

1. Are not allowed.

K. Flexible Pipe Connector (Boot)

1. Shall conform to ASTM C-923.

2. Manufactured and sized specifically for the type and size of pipe connecting to the manhole.

L. Pipe to Manhole Adapter

1. "Romac Style 'LCT' Manhole Adapter Gasket" as manufactured by Romac Industries, Inc., Fernco Large Diameter Waterstop or Manhole Adapter as manufactured by Fernco, Inc., or approved equal.

M. Joint Sealant Material

1. Shall meet the following requirements.
    a. Preformed flexible joint sealant (mastic) meeting requirements of ASTM C 990. Ram-Nek as manufactured by Henry Company Sealants Division, Kent Seal as manufactured by Hamilton Kent, Polysealant as manufactured by J-K Polysource, Inc., or approved equal.

N. Concrete

1. Pre-cast: Shall meet the requirements of ASTM C478.

2. Cast-in-place: Class 4000: 28-day minimum compressive strength of 4000 psi and contain not less than 6 ½ bags of low alkali, Type II or Type V Portland Cement per cubic yard and air entrainment per ASTM C-150.

O. Non-Shrink Cementitious Grout

1. High strength, non-shrink, non-metallic, cement-based grout.

2. Surfaces shall be prepared, and grout shall be prepared and placed according to manufacturer's directions.

P. Non-Shrink Epoxy Grout

1. High strength, non-shrink, 100% solids, 3 component epoxy grout system.

2. Surfaces shall be prepared and grout shall be prepared and placed according to manufacturer's directions.

Q. Manhole Odor Control Units

1. Manhole insert, carbon filter cartridge and bladder specifically designed to remove hydrogen sulfide and other odorous components in the exhaust air from the wastewater system.

2. Manhole Odor Eliminator (MOE) as manufactured by Inventive Resources Inc. or an approved equal activated carbon filter media system.

3. The manhole frame and cover supplied for manholes with these Manhole Odor Control Units shall meet the requirements of Section I Frame and Cover above.

R. Expandable Waterstop

1. Composite bentonite clay based or expandable rubber-based water-stop designed to create watertight joints in concrete.

2. Hydrotite as manufactured by Greenstreak, Superstop as manufactured by Tremco, Mirastop as manufactured by Carlisle Coatings and waterproofing, or approved equal.

3. Provide adequate concrete cover over water-stop per manufacturer's recommendation.

4. Surface preparation and installation per manufacturer's recommendation.

S. Polymer Concrete Manholes

1. Polymer Concrete Manholes shall meet the requirements of this Section 5.4. ASTM C-478 material and manufacturing is allowed compositional and dimensional differences required by a polymer product.

2. Manhole risers, transition slabs, conical tops, grade rings and manhole base sections shall be designed, by manufacturer, to requirements of ASTM C-478 and ASTM C 857 as modified to accept polymer construction in lieu of cementitious concrete as follows.
    a. Polymer Mixture – the mixture shall consist solely of thermosetting resin, sand and aggregate. No cementitious materials shall be allowed as part of the mix design matrix. All sand and aggregate shall be nonreactive in an acid environment.
    b. Required wall thickness for all members will be that stated by polymer manhole manufacturer based upon loading conditions and materials properties. The wall thickness of risers and conical tops shall be not less than that prescribed by the manufacturer's design by more than 5%. A wall thickness greater than the prescribed design shall not be cause for rejection.
    c. Thermosetting Resin – the resin shall have a minimum deflection temperature of 158º F when tested at 264 psi following Test Method D 648.

The resin content shall not be less than 7% of the weight of the sample as determined by Test Method D2584. Resin selection shall be suitable for applications in the corrosive conditions to which the structures will be exposed.

d. Each manhole component shall be free of all defects, including indentations, cracks, foreign inclusions and resin starved areas that, due to their nature and degree or extent, detrimentally affect the strength and serviceability of the component part. The internal diameter of the manhole components shall not vary more than 1%. Variations in height of two opposite sides of risers and conical tops shall not be more than 5/8 inch. The under run in height of a riser or conical top shall not be more than ¼ in/ft of height with a maximum of ½ inch in any one section.
e. Marking and Identification – each manhole component shall be marked on the inside and outside with the following information: Manufacturer's name or trademark, Manufacturer's location and production date.
f. Manhole joints shall be assembled with a bell and spigot or shiplap butyl mastic joint so that on assembly, manhole base riser and top section make a continuous and uniform manhole. Joint sealing surfaces shall be free of dents, gouges and other surface irregularities that would affect joint integrity.
g. Construct invert channels to provide smooth flow transition waterway with no disruption of flow at pipe to manhole connections. Invert slope through manhole is as indicated on drawings. Provide curves for side inlets and smooth invert fillets for flow transition between pipe inverts. Polymer bench and channel are to be constructed with all resin aggregate material – no alternative fill material is allowed.
h. Provide resilient connectors per Section I. Flexible Pipe Connector (Boot) above.
i. Exceptions to ASTM C-478 – components shall be designed for the intended combinations of manufacturing materials. Component designs may be as non-reinforced members as recommended by the manufacturer. Steel reinforcement is not required for circumferential reinforcement, joint reinforcement, base slab reinforcement or hoop reinforcement, but may be placed for the purpose of product handling.

3. Grouting – all material needed for grouting and patching shall be a polyester mortar compound provided by the manhole manufacturer.

4. Manhole steps will not be required in Polymer Concrete Manholes.

5. The design of Polymer Concrete Manholes to be located in areas where the groundwater level is higher in elevation than the bottom of the manhole shall consider the effects of buoyancy. An extended base footer may be necessary.

6. Polymer Concrete Manholes shall be 'Armorock' polymer manhole system or approved equal.

T. Integrated Polymer Lined Manholes

1. Integrated Polymer Lined Concrete Manholes shall meet the requirements of this Section 5.4. and ASTM C-478.

2. Manhole risers, transition slabs, conical tops, grade rings and manhole base sections shall be designed, by manufacturer, to requirements of ASTM C-478 and ASTM C-857.

3. Manholes shall be constructed dry cast and/or wet cast manufactured using Type III/V Cement which meets the requirements for both Type III and Type V Cement.

4. Joints shall be rubber gaskets per ASTM C-443 or flexible butyl mastic per ASTM C-990.

5. Linings shall be high-density polyethylene, fiber-reinforced plastic.

6. Manhole steps will not be required in Integrated Polymer Lined Concrete Manholes.

7. Perfect Lined Manholes as manufactured by Geneva Pipe and Precast – A Northwest Pipe Company or an approved equal.

U. External Joint Collar for Manholes

1. For use on existing manholes where new wall sections are placed on existing sections with nonmatching joints.

2. Shall conform to ASTM C877. Cretex Wrap as manufactured by Cretex Specialty Products or approved equal.

5.5 Low-Pressure Sewer System

A. General

1. The design of the Low-Pressure Sewer System shall meet the requirements of Section 4 Low Pressure Sewer System.

2. The proposed Low-Pressure Sewer System and appurtenances shall be consistent within each development.

B. Main Line Materials

1. Low-Pressure Sewer System pipe: C900 PVC pressure pipe meeting the requirements of Section 5.3.

2. Flushing Connections.
   a. Manhole: Minimum 5' diameter meeting the requirements of Section 5.4.
   b. Ball Valves:
      1. 2” Main Ball Valve: PVC, True Union ball valve, full port, threaded X PE butt fused end connections, 150 psi working pressure, non-locking handle
      2. 1” Hose End Ball Valve: PVC body, ball and stem, full port, lever-style handle, threaded, minimum 150 psi working pressure.
   c. Universal Coupling: PVC, 110 psi working pressure, 1". Air King Universal Coupling as manufactured by Dixon Valve and Coupling Co. or approved equal.
   d. Pressure Hose:
      1. Tube: Nitrile synthetic rubber or Type P(EDPM) RMA Class A or B (High to medium oil resistance).
      2. Temperature: -20° to 190◦ F.
      3. Reinforcement: spiral or braided synthetic textile cord.
      4. Cover: Synthetic rubber or Type P(EDPM) RMA Class A or B (high to medium oil resistance).
      5. Pressure Class: Min 250 psi working pressure.
      6. Connectors: Threaded brass with minimum 250 psi working pressure.
      7. Size: Minimum 1" inside diameter.
      8. Manufacturers: Gates 6B Dura Master® as manufactured by Gates Corporation, Wingfoot® as manufactured by Goodyear Engineered Products Grizzly™ 500 as manufactured by Parker Industrial Hose or approved equal.

e. Pipe Supports
   1. Adjustable Pipe Saddle Support w/ Strap: Two-piece, full circle porcelain coated ductile iron pipe saddle with stainless steel strap and neoprene liner to isolate and protect pipe; threaded PVC pipe w/ adjuster; and threaded PVC standpipe, cross bolted to prevent up-lift.
   2. Pipe supports for smaller diameter pipe (2" and 3") may consist of Unistrut, or approved equal, channel, brackets and clamps. All parts shall be PVC.

f. Miscellaneous Pipe and Fittings: Threaded, schedule 80 PVC.

3. Combination Air Valve.
   a. Manhole: Minimum 5' diameter meeting the requirements of Section 5.4.
   b. Sewage Combination Air Release and Air/Vacuum Valve with Accessories. A.R.I. Series D-025, Reinforced Nylon body, as manufactured by A.R.I. Flow Control Accessories or approved equal. Size of valve shall be determined by Engineer and approved by Ash Creek SSD.
   c. Valves: Meeting requirements of Section 5.5.B.2.b above
   d. Tracer wire to ring and cover.
   e. See Appendix D “Air Vac Valve” Detail Drawing.

C. Private Lateral Wastewater Line Materials

1. Individual Low-Pressure grinder pump station:
   a. E/One D-Series as manufactured by Environment One Corporation.
   b. Omni Grind or Omni Grind Plus as manufactured by Barnes.
   c. Equivalent as approved by Ash Creek SSD.

2. Low-Pressure Sewer System pipe: PVC pressure pipe meeting the requirements of Section 5.3.

3. Private Lateral Components:
   a. Stainless steel combination curb stop valve/check valve assembly with valve box: with compatible polypropylene compression adapter fittings for connection to PVC pipe.
   b. Valve boxes shall include valve operator extension rod.
   c. Valve boxes located in traffic areas shall be traffic rated iron or shall have a traffic rated frame and cover installed over the valve box.
   d. Other components used in connecting the Low-Pressure grinder pump station to the public Low-Pressure system shall be compatible with the

components of the pump station; especially in regard to galvanic corrosion of dissimilar metals.

5.6 Wastewater Pump Stations

A. General

1. Equipment and materials proposed for wastewater pump stations shall be reviewed and approved by Ash Creek SSD during the design review process.

2. As a minimum the pump station construction shall incorporate the following features.
    a. Wet Well Structure.
        1. Polymer, as manufactured by Armorock or similar as approved by Ash Creek SSD.
    b. Wet Well Metal Items.
        1. All metal items within the wet well including guide rails, lifting cable or chain, anchor bolts, fasteners, clips, etc., shall be stainless steel 304 or 316.

5.7 Pipe Couplings

A. Main Line Pipe Couplings

1. Concrete Pipe, Asbestos Cement Pipe, Clay Pipe and connection of dissimilar pipe material not covered below.
    a. Flexible PVC or rubber pipe connector with stainless steel shear ring, Strong Back - RC Series Repair Coupling as manufactured by Fernco, Inc., Flex-Seal ARC Series as manufactured by Mission Rubber Co. or approved equal. Transition couplings or bushings required for pipe material of differing outside diameter.

2. HDPE Pipe: HDPE Electro fusion coupling as manufactured by Central Plastics Company or approved equal.

3. PVC Pipe.
    a. PVC double bell repair coupling, ASTM D 3034, SDR 35, with gasketed joints conforming to ASTM 3212.
    b. Generally not permitted, but if approved by Ash Creek SSD, Flexible PVC or rubber pipe connector with stainless steel shear ring, Strong Back - RC

Series Repair Coupling as manufactured by Fernco, Inc., Flex-Seal ARC Series as manufactured by Mission Rubber Co. or approved equal.

4. Ductile Iron Pipe to PVC or HDPE Pipe.
    a. Ductile iron pipe short body tee, mechanical joint with gasketed cap, transition gaskets sized for outside pipe diameters. Lining shall be Highbuild multi-component Amine cured Novolac Epoxy lining, Protecto 401Ceramic Epoxy or approved equal, applied according to manufacturer's recommendations.

5. HDPE Pipe to PVC Pipe:
    a. Poly-CAM Series 731 transition for HDPE/PVC, stainless steel sleeve.
    b. Central Plastics gasketed outlet x butt-fused outlet or approved equal.
    c. Ductile iron pipe short body tee, mechanical joint with gasketed cap, transition gaskets sized for outside pipe diameters. Lining shall be Highbuild multi-component Amine cured Novolac Epoxy lining, Protecto 401Ceramic Epoxy or approved equal, applied according to manufacturer's recommendations.

6. Romac Repair Couplers or equivalent shall be used for all pressure line repairs. Repair couplers shall be wrapped with plastic and secured at both ends.

7. Coupling bolts shall be greased with non-oxidizing grease and the coupling shall be wrapped with polyethylene sheeting and taped.

B. Private Lateral Wastewater Line Pipe Couplings

1. Shall meet the requirements of Section 5.7 for the type of pipe being used.

2. PVC solvent ridged pipe is preferred.

3. Connection of the exterior lateral pipe to the waste pipe exiting the building.
    a. Flexible PVC or rubber pipe connector with stainless steel shear ring, Strong Back - RC Series Repair Coupling as manufactured by Fernco, Inc., Flex-Seal ARC Series as manufactured by Mission Rubber Co. or approved equal.
    b. Transition couplings or bushings required for pipe material of differing outside diameter.
    c. A concentric reducer and short pipe section matching material on house side of connection may be used in conjunction with the flexible pipe connector

and sheer ring if diameter of pipe exiting house is smaller than exterior lateral pipe.

d. “No-hub” type couplings shall not be used.

5.8 Bedding and Backfill Material

A. Bedding and Initial Backfill Material

1. Manufactured, angular, crushed stone or rock, or crushed stone/sand mixtures free from organic matter meeting one of the following gradations when tested in accordance with ASTM D 2487.

   a. For pipe diameters 4" and larger:

	Open Graded	**Dense Graded**
US Stand. Sieve	**Percent Passing**	
1 1/2"	100	100
3/4"	95-100	95-100
#4	0-10	10-50
200	0-5	0-5

   b. For pipe diameters less than 4”:

	Open Graded	**Dense Graded**
US Stand. Sieve	**Percent Passing**	
1 1/2"	100	100
1/2"	95-100	95-100
#4	0-10	10-50
200	0-5	0-5

2. Coarse, dense graded sand with 100% passing the #4 sieve and 0-5% passing the #200 sieve may be used as bedding and initial backfill material for 1 ¼” and 1 ½” Low-Pressure sewer system Private Lateral Wastewater Lines.

3. Pea gravel, squeegee, or other similar material that will flow when unconfined are not acceptable bedding and initial backfill material.

B. Final Backfill Material

1. Final backfill material in public or private roads, streets and rights-of-way shall meet the requirements of Ash Creek SSD and applicable City, County or State standards and permits.

2. Final backfill material shall be acceptable material free of hard clods, frozen material or excessive amounts of large rocks greater than 4” minus. If existing material cannot meet compaction requirements, acceptable import material will be required.

3. In areas with known collapsible soils or groundwater, appropriate design recommendations should be provided. A geotechnical investigation may be required, and the recommendations of the geotechnical report shall be followed.

C. Cement Treated Fill Material (Flowable Fill)

1. Cement treated fill shall consist of low alkali Type II Portland cement, water, non-plastic sand or concrete aggregate, and other additives to meet the performance requirements.

2. Performance Requirements: Unconfined compressive strength per ASTM D4832.
    a. 10 psi minimum in 24 hours.
    b. 150 psi maximum in 28 days.

D. Untreated Base Course Material

1. Untreated base course material shall consist of clean, hard, tough, durable, and sound mineral aggregates that consist of crushed stone, crushed gravel or crushed slag, free of detrimental and organic matter.

2. Gradation. Shall conform to Utah Department of Transportation specification for Untreated Base Course as follows:

	1 1/2"	**1"**	**3/4"**
US Stand. Sieve	**Percent Passing**		
1 1/2"	100	-	-
1"	-	100	-
3/4"	81-91	-	100
1/2"	67-77	79-91	0
3/8"	-	-	78-92
#4	43-53	49-61	55-67
#16	23-29	27-35	28-38
#200	6-10	7-11	7-11

E. Trench Dike Material

1. Cement Treated Fill Material: Shall meet the requirements of Section 5.8.C.

5.9 Casings

A. Casings Under Roadways

1. Casings shall meet the requirements of the applicable City, County or State standards.

2. As a minimum, casings shall be steel pipe conforming to ASTM A 139, Grade A. Alternate casing pipe material may be allowable, as approved by Ash Creek SSD and the roadway owner.

3. Joints between sections of casing pipe shall be welded around the full circumference to provide a water-tight joint.

4. Minimum casing diameter shall be 24" to allow for future upsizing of carrier pipe. In situations where upsizing of the carrier pipe is not likely, a smaller diameter casing may be allowable, as approved by Ash Creek SSD.

5. Minimum wall thickness shall be in accordance with the following:

Casing Diameter (inches)	Nominal Wall Thickness (inches)
24	0.312
30	0.438
36	0.462

6. Casing Spacers meeting requirements of Section 5.9.C. shall be installed on carrier pipe inside all casings.

B. Other Main Line Casings

1. Casings required on main lines outside of roadways shall, as a minimum, be steel pipe conforming to ASTM A 139, Grade A. Alternate casing pipe material may be allowable, as approved by Ash Creek SSD.

2. Joints between sections of casing pipe shall be welded around the full circumference to provide a water-tight joint.

3. Minimum casing diameter shall be 18" to allow for future upsizing of the carrier pipe. In situations where upsizing of the carrier pipe is not likely, a smaller diameter casing may be allowable, as approved by Ash Creek SSD.

4. Minimum wall thickness shall be in accordance with the following:

Casing Diameter (inches)	Nominal Wall Thickness (inches)
18	0.312
24	0.312
30	0.438
36	0.462

5. Casing Spacers meeting requirements of Section 5.9.C. shall be installed on carrier pipe inside all casings.

C. Casing Spacers

1. Maximum of 6' separation between spacers with one casing spacer within 2’ of each side of a pipe joint and the rest evenly spaced. Maximum 12” distance between end of casing and first spacer.

2. Band shall be 14-gauge heat fused PVC coated steel.

3. Risers shall be 10-gauge heat fused PVC coated steel welded to the band.

4. Liner shall be PVC.

5. Runners shall be reinforced plastic.

6. Hardware shall be stainless steel.

7. Spacer configuration shall be restrained with spacer intervals and locations per manufacturer's recommendations.

8. Spacers shall be concentric.

D. Casing End Seals

1. Casing end seal shall be a pull-on type or approved wrap-around type comprised of 1/8" thick synthetic rubber compound sized to fit the carrier pipe and casing.

2. Stainless steel bands shall be used to secure the end seal to the pipe.

E. Private Lateral Wastewater Line Casings

1. Casings on private laterals 6" in diameter and smaller shall meet the requirements of Section 5.2 or approved equal.

2. Casings shall be sealed to prevent the migration of materials in the casing pipe.

5.10 Miscellaneous Material

A. Marking Tape

1. Marking tape shall be a type specifically manufactured for marking underground utilities and shall meet the following requirements.

a. Tape shall be of an acid and alkali-resistant polyethylene film.
b. Tape width shall be 2" minimum on laterals and 3" minimum on main lines. Minimum thickness shall be 0.004".
c. Tape color shall be GREEN and shall bear a continuous printed inscription "SEWER."

B. Tracer Wire

1. Tracer wire shall be a type specifically manufactured for the purpose of detecting buried utilities and shall meet the following requirements.
    a. Minimum 12 AWG copper wire or copper clad steel core wire coated with a minimum 30 mil High Molecular Weight Polyethylene (HMWPE) jacket designed specifically for buried use.
    b. Jacket color shall be green.
    c. Tracer Wire Connectors.
        1. Silicon filled direct bury wire nuts: Dryconn Direct Bury Wire Nut (10600), as manufactured by King Innovation or approved equal.
        2. Direct bury splice kit: 3M™ Direct Bury Splice Kit as manufactured by 3M Company or approved equal.

C. Caps for Main Line and Private Lateral Stubs

1. Glued, fused or gasketed cap.

2. Expansion type (Brandt™) plugs shall not be used.

D. Private Lateral Wastewater Line Stub Markers

1. 6' long Tee post. See Detail Drawing in Appendix D.

2. The marker shall extend from the top of the stub end to a minimum 3' above final grade.

3. The exposed portion of the marker shall be painted green.

E. Cleanout Cap

1. In paved areas and un-paved traffic areas: Threaded brass cap in threaded x solvent weld PVC adapter, threaded brass cap in cast iron body, cast iron blind cap or PVC threaded cap in threaded x solvent weld PVC adapter. Cast iron body shall be connected to cleanout riser pipe with flexible-type neoprene coupling as

manufactured by FERNCO or approved equal or no-hub type connector to provide a water-tight connection. Cleanout Ring and Cover per Section 5.10.F below shall be placed over the cleanout assembly.

2. In unpaved non-traffic areas: Threaded brass cap in cast iron body or cast-iron blind cap per Section 5.10.E.1 above.

3. See “Sewer Cleanout W/Lid” Detail Drawing in Appendix D.

F. Cleanout Ring and Cover

1. In paved areas and un-paved traffic areas:
    a. 4" and 6" cleanouts:
        1. Cast iron Frame and Cover conforming to ASTM A48 Class 35B similar to D&L Supply H-8030 or approved equal. Ring and cover shall be cleaned and painted with an asphalt coating prior to delivery to site.
        2. Heavy Duty Cleanout Housing with cast iron, or other approved cover marked “SEWER”.
        3. In all cases the Ring and Cover must be large enough in diameter to provide separation from the cleanout standpipe and cleanout cap and allow access for removal of the Cleanout Cap.
    b. Larger than 6" cleanout: a properly supported standard manhole frame and cover per Section 5.4.

2. Landscaped Areas: 10” minimum diameter, marked “SEWER”

3. See “Sewer Cleanout W/Lid” Detail Drawing in Appendix D.

G. Private Lateral Wastewater Line Connections

1. Private lateral saddles on all gravity main line pipe material except HDPE shall be JM Eagle – solvent weld sewer saddle with bands or equal.

H. Grease Interceptors, Oil Separators and Sand Interceptors

1. See “Grease and Sand Interceptor” Detail Drawing in Appendix D.

2. Precast reinforced concrete structure consisting of a vault with integral floor, vault riser sections, baffle wall, lid, approved manhole adjustment, frames and covers, and piping.

3. 3-bay, size as designed by a Registered Professional Engineer licensed in State of Utah and approved by Ash Creek SSD. Minimum 1,000 gallons.

4. Precast vault, vault riser sections, and lid.
    a. Shall be designed by a Registered Professional Engineer licensed in the State of Utah.
    b. Loading condition:
        1. Walls designed for a saturated equivalent fluid at rest.
        2. Design surcharge loading: AASHTO H-20 truck load.
    c. Concrete: Minimum 28-day compressive strength of 4000 psi.
    d. Reinforcing steel: ASTM A615 Grade 60.
    e. Concrete cover over reinforcing steel: Minimum 1 ½”.
    f. Manhole Adjustment Materials: meeting requirements of Section 5.4.
    g. Frame and cover: meeting requirements of Sections 5.4.I.
    h. Piping: PVC with solvent weld joints meeting the requirements of Section 5.2.C.
    i. Piping connection to precast vault: Flexible Pipe Connector (Boot) meeting the requirements of Section 5.4.K.
    j. Joints between vault, vault riser sections, lid, grade rings and frame and cover shall be sealed with flexible butyl blend sealant (mastic) meeting the requirements of Section 5.4.M.

6.0 CONSTRUCTION REQUIREMENTS

6.1 Inspection of Public Wastewater System Extension and Modifications

6.1.1 General

A. Inspection of Public Wastewater System extensions and modifications by Ash Creek SSD for Developer Sponsored Projects will include the following activities. Inspection of Ash Creek SSD Sponsored Projects will generally follow the same process but may be modified to meet the specific needs of the project.

   1. Review and approval of required submittals from Contractor.
   2. Preconstruction Meeting.
   3. Periodic Inspections.
   4. Preliminary Inspection
   5. Final Inspection.
   6. Warranty Inspection.

B. All work and materials shall be subject to inspection by Ash Creek SSD until the end of the warranty period.

C. The Ash Creek SSD Inspector shall have access to the work site at all times.

D. Inspections conducted by the Ash Creek Inspector will be according to the Approved Construction Drawings and these Ash Creek SSD Design and Construction Standards.

E. Inspections will be conducted as appropriate and as time and scheduling permits, as determined by Ash Creek SSD. The Developer shall make the necessary arrangements for inspection of the Contractor's work during the regular 40-hour work week. If the Contractor works more than a 40-hour week, the financial responsibility for added inspection shall be the responsibility of the Developer. The prevailing hourly rates for inspection are on file with Ash Creek SSD. Such prevailing rates will be applied at 1-1/2 times the regular rates for periods over 40 hours per week.

F. The Contractor shall notify the Ash Creek Inspector a minimum 48 hours prior to the following:

   1. Start of construction.
   2. Any change of schedule.
   3. Work to be conducted on weekends, or holidays.

G. Ash Creek SSD will notify the Project Manager of any nonconforming work or material as soon as practical after that non-conforming work or material becomes known to Ash Creek SSD.

H. The Contractor shall make necessary corrections. Non-conforming work or material will not be approved by Ash Creek SSD. The Contractor shall promptly remove from the premises all work and materials determined to be defective or as failing to conform to the approved plans, whether operational or not, and the Contractor shall promptly replace and re-execute his own work in accordance with Ash Creek SSD's specifications.

    1. If the Contractor does not remove such work or materials within a reasonable time after notice, Ash Creek SSD may cause such work or materials to be removed and stored at the expense of the Developer. If the Developer does not pay the expenses of such removal within 10 days' time after such removal, Ash Creek SSD may, upon thirty days' written notice, sell such materials at private sale and shall account for the net proceeds thereof after deducting all the costs and expenses that should have been borne by the Developer.

6.1.2 Contractor Submittals

A. Contractor shall deliver required submittals to Ash Creek SSD for review and approval a minimum 1 week prior to Preconstruction Meeting.

B. Ash Creek SSD will advise Contractor of any deficiencies.

C. Contractor shall make revisions and resubmit, if required.

D. Approval of all required submittals is required prior to holding the preconstruction meeting.

E. Product data sheets shall be marked to identify applicable products, models, options, and other data.

F. Fabrication and/or purchase of any item shall not be commenced before Ash Creek SSD has reviewed and approved the pertinent information.

G. Required Material Submittals.

    1. Pipe, fittings, and appurtenances.
    2. Manholes and appurtenances.
    3. Pipe bedding sieve analysis.
    4. Tracer wire and connectors.

5. Marking tape.
6. Flowable Fill.
7. Casings and appurtenances.
8. Low-Pressure sewer system materials and appurtenances.
9. Odor control units.
10. Pump station equipment, materials and appurtenances.

H. Other Required Submittals.

1. Insurance and licensing documentation.
2. Proposed construction schedule.
3. Proposed acceptance testing companies.
4. Specialized subcontractors.
5. Bypass pumping plan, if required.
6. Other submittals as required by Ash Creek SSD.

6.1.3 Preconstruction Meeting

A. A preconstruction meeting shall be held for all projects that include extensions and modifications to the Public Wastewater System.

B. The preconstruction meeting shall be held after final design approval and prior to the start of construction.

C. The preconstruction meeting will generally be scheduled through the City where construction is taking place.

D. Individuals present include the Owner, Developer, Project Manager, or designated project representative, Project Engineer, General Contractor for the project, City's Representative, Ash Creek SSD Representative, and other individuals requested to attend.

E. The purpose of the preconstruction meeting is as follows:

1. To discuss the work and the proposed schedule.
2. To discuss procedures for processing the project.
3. To designate the name of the individual who shall have the authority to act for the Contractor at all times while the work is in progress.
4. To establish a working understanding among the parties as to the work.

6.1.4 Periodic Inspections

A. The Ash Creek SSD Inspector conducts periodic inspections of the wastewater system extensions and modifications during the course of construction.

B. The primary areas of interest for the periodic inspections are as follows:

1. Pre-construction Checks.

    a. Locate and become familiar with existing/proposed public wastewater system tie-ins.
    b. Verify that necessary plugs are in-place prior to construction.
    c. Verify that appropriate measures are in place to protect the existing wastewater system.

2. Approved Drawings: Verify that Approved Construction Drawings are on site and being used by the Contractor for construction of the wastewater improvements.

3. Material verification: Verify that all materials used for construction of the wastewater system conform to the approved materials submittals, the Approved Construction Drawings and these Construction Standards.

4. Manholes

    a. Verify conformance to manhole details and specifications.
    b. Observe manhole base placement and stacking of sections.
    c. Verify all joints are sealed according to specifications.
    d. Verify proper grouting of pipe to manhole interface.
    e. Verify proper core drilling, if required.
    f. Verify acceptable conformance to cast-in place requirements, if required.
    g. Verify proper final adjustment of manhole frame and cover to final elevation.
    h. Verify installation of valves, supports and other fittings and features, if Low-Pressure Sewer System.

5. Installation of Pipe.

    a. Review grades and alignments with Approved Construction Drawings.
    b. Conduct periodic inspection of main line installation.
    c. Visual inspection of lines.

6. Pipe Bedding
    a. Verify conformance to bedding details and specifications.
    b. Observation of bedding material, backfill and compaction efforts.

7. Lateral Stubs
    a. Verify location of wye or other connection to main line.
    b. Verify length and slope.
    c. Inspect and verify bedding, pipe and end cap, initial backfill, marking tape and installation of stub marker.
    d. Inspect cleanout construction, if required.
    e. Inspect installation of curb stop valve, concrete support block and check valve assembly, if Low-Pressure Sewer System.
    f. All Sewer laterals shall be perpendicular to the main sewer line.

8. Other System Features: Verify conformance to specifications and Approved Construction Drawings.

9. Utility Encounters: Verify conformance with proper separation and crossing requirements.

10. Observe required acceptance tests.

11. Inspection reports for each visit to the site will be prepared by the Ash Creek SSD Inspector.

6.1.5 Preliminary Inspection

A. After installation of the pipe, manholes and other features, backfilling of trenches, mandrel, air test, TV inspection and all other utilities are installed and prior to paving the Contractor shall request that Ash Creek SSD conduct a preliminary inspection.

B. All low-pressure air tests, vacuum tests, hydraulic pressure tests, initial continuity test of tracer wires, and TV Inspections of the installed system, meeting the requirements of Section 6.16, shall be performed prior to the preliminary inspection.

C. Plywood bottoms shall be placed in the manholes after the TV Inspection in order to protect the system from debris resulting from the paving and manhole adjustment process. The plywood bottoms shall remain in place until after the final inspection. Temporary removal of the plywood bottoms may be necessary during the preliminary inspection and during

correction of deficient items on the preliminary "punch list" but shall be immediately replaced to protect the system.

D. Ash Creek SSD will review the test results and TV inspection video. Once failed test or faulty pipe installation identified through camera work has been corrected, the preliminary inspection will be performed.

E. The Contractor shall provide an individual familiar with the newly constructed wastewater system to assist the Ash Creek SSD Inspector with the preliminary inspection.

F. The primary areas of interest for the preliminary inspection are as follows:

1. Construction of manholes and inverts.
2. Condition of pipe.
3. Cleanliness of pipe.
4. Construction of other system features.
5. Private Lateral stub markers.
6. Deficiencies noted during periodic inspections.

G. Ash Creek SSD will prepare a preliminary inspection letter with a "punch list" of deficient items. A copy of the preliminary inspection letter will be sent to the Developer, the Project Engineer, and the Contractor.

H. The Contractor shall correct the deficient items listed in the "punch list" letter and advise the Ash Creek Inspector when the items are complete.

I. The Ash Creek Inspector will verify completion of the deficient items.

J. After the deficient items have been corrected and verified, paving and final adjustment of manholes to grade may occur.

6.1.6 Final Inspection

A. After completion of paving and adjustment of manholes to grade, and after submittal of Record Drawings as required by Section 3.8 and results of the final continuity test on the installed tracer wire, as required by Section 6.16.8, the Contractor shall request that a final construction inspection be performed.

B. Ash Creek SSD will perform the final inspection.

C. The Contractor shall provide an individual familiar with the newly constructed wastewater system to assist the Ash Creek SSD Inspector with the final inspection.

D. The primary areas of interest for the final inspection are as follows:

1. Preliminary inspection "punch list" items.
2. Adjustment of manholes to final grade.
3. Alignment and tolerances of cone, manhole adjustment, and frame and cover.
4. Private Lateral stub markers.
5. "S" stamped on the curb over the sewer lateral.
6. Placement of off-road manhole markers.
7. Final grading around off-road manholes.
8. Revegetation.
9. Access roads.
10. All other items required for completion of the project.

E. Ash Creek SSD will prepare a final inspection letter with a "punch list" of deficient items. A copy of the final inspection letter will be sent to the City, Developer, the Project Engineer and the Contractor.

F. The Contractor shall correct the deficient items listed in the final inspection letter and advise the Ash Creek SSD Inspector when the items are complete.

G. The Ash Creek SSD Inspector will verify completion of the deficient items.

H. When all deficient items have been completed and upon approval and direction by Ash Creek SSD, the Contractor shall remove plywood bottoms and all plugs installed on the system. The Ash Creek SSD Inspector shall observe the removal of all plugs.

6.1.7 Warranty Inspection

A. Ash Creek SSD will conduct a warranty inspection according to Section 2.3.5 one year from the time the final completion of the project is determined.

6.2 Inspection of Private Lateral Wastewater Lines

6.2.1 Scheduling Inspection Appointments

A. Prior to starting construction of the Private Lateral Wastewater line, and at various times during the construction process, the Contractor shall contact Ash Creek SSD to request a Private Lateral inspection.

B. Contractors shall call Ash Creek SSD for an inspection during the regular 40-hour work week with a minimum of 48 hours (excluding weekends and Ash Creek SSD observed Holidays) prior to the time it is needed. Same day or spot inspections will not be provided. During periods of heavy inspection requests, additional notice may be necessary

C. Inspections are scheduled on a first-come first-served basis.

D. If an inspection is scheduled and the construction is not ready for the inspection at the scheduled time, the contractor will be required to schedule another inspection with Ash Creek SSD at the next available time slot.

E. Excessive call-back inspections caused by the contractor not being ready for an inspection at the scheduled time may result in additional Administration Fees being charged to the homeowner, building owner or facility owner.

6.2.2 Required Inspections

A. Inspections by an Ash Creek SSD Inspector are required at the following times.

1. New Private Lateral Connections.

    a. If a direct connection of the Private Lateral to an existing Public Wastewater System collection line or manhole is required, inspection of the coring operation and installation of the saddle or manhole connection is required.
    b. After installation of the Private Lateral pipe, fittings, and other appurtenances but prior to backfilling and completion of bedding above spring line.
    c. When deficiencies in the installation noted during a prior inspection are corrected and a re-inspection fee has been paid, the contractor may reschedule an inspection.

2. Grease Interceptors and Sampling Manholes.
    a. After placement of the grease interceptor and sampling manhole but prior to backfilling.
    b. After backfilling, paving and adjustment of frame and cover to grade.

3. Abandoned Private Laterals: If an existing Private Lateral to the Public Wastewater System is abandoned, the abandonment shall be inspected prior to backfilling.

4. Damaged Private Laterals: If an existing Private Lateral is damaged, the repair shall be inspected by an Ash Creek SSD Inspector prior to backfilling.

6.2.3 Private Lateral Cleanout Locations

A. 54-8a-10.5 Utah Code Annotated (UCA) requires that:

> *"(a) An operator or person installing or replacing a sewer lateral cleanout beginning August 1, 2009 shall install or replace the sewer lateral cleanout in a manner so that the lateral can be located, including:*
> *a. House sheets; or*
> *b. Electronic markers.*
> *(b) An operator or person installing a sewer lateral cleanout shall notify the sewer operator of the sewer lateral cleanout location for record keeping purposes."*

B. To assist the Contractor in meeting the requirements of the UCA, and to standardize the cleanout location information provided to Ash Creek SSD as the "Sewer Operator", the Ash Creek SSD Inspector will take measurements and prepare the "lateral map" which will document cleanout locations.

C. In addition to providing the "lateral map" information, the Contractor shall place, per detail sheet, a monument ring and cover at the cleanout location and may choose to place electronic markers. See Appexdix F "Sewer Cleanout W/Lid" for Detail Drawing.

6.2.4 Inspection Procedure

A. The primary areas of interest for inspections of Private Lateral Wastewater Lines are as follows.

1. Material verification: Verify that pipe, fittings, couplings, bedding and initial backfill materials, cleanout caps, ring and cover, and other material conform to the specifications.

2. Installation of Pipe.
    a. Check slope and alignments.
    b. Visual inspection of lines prior to backfilling (after bedding to spring line is installed).
    c. Verify that minimum cover requirements are met.
3. Couplings: Verify alignment of pipe and couplings and conformance to specifications. See Section 5.7.
4. Connections: Verify that connections to manholes, main lines or stubs and to the building stub meet the specifications.
5. Pipe Bedding: Verify conformance to bedding details and specifications.
6. Marking tape: Verify that marking tape is on site for installation.
7. Cleanouts: Document locations and verify that standpipe is vertical and that fittings, cap, ring and cover, and other materials conform to specifications.
8. Other Features: Verify conformance to specifications.
9. Utility Encounters: Verify conformance with proper separation and crossing requirements.

B. The Ash Creek Inspector will perform or witness tests on the Private Lateral Wastewater Line as required by Section 6.17.

C. The Ash Creek SSD inspector will document the location of the Cleanouts on the Private Lateral Wastewater Line, as required by Section 6.2.3, and will document other aspects of the Private Lateral Wastewater Line.

D. The Contractor shall provide an individual familiar with the newly constructed private lateral to assist the Ash Creek SSD Inspector with the inspection.

E. The Ash Creek SSD Inspector will advise the Contractor's on-site representative of any deficient items at the time of the inspection and, if required, will prepare a Partial Inspection letter that documents those deficient items. A copy of the Partial Inspection Letter will be sent to the homeowner, building owner or authorized representative and the Contractor.

F. The homeowner, building owner or authorized representative and the Contractor shall correct the deficient items listed in the Partial Inspection Letter and schedule another appointment with the Ash Creek SSD Inspector according to Section 6.2.1.

G. The Ash Creek SSD Inspector will verify completion of the incomplete items and repair of deficient items.

6.3 General Construction Requirements

6.3.1 Protection of Existing Public Wastewater System

A. No connection to the existing Public Wastewater System or to existing Private Lateral Wastewater Line stubs shall be made without approval of Ash Creek SSD and inspection by an Ash Creek SSD Inspector.

B. No modification of the existing Public Wastewater System or existing Private Lateral Wastewater Lines shall be made without approval of Ash Creek SSD and inspection by an Ash Creek SSD Inspector.

C. The Public Wastewater System and Private Lateral Wastewater Lines shall be protected from damage. Any damage to the existing system resulting from the Contractor's operation shall be corrected by the Contractor at their expense.

D. All repairs to the Public Wastewater System shall be observed by an Ash Creek SSD Inspector.

6.3.2 Excluding Construction Debris and Material from the Existing Public Wastewater System

A. All construction debris and material, including water, native soil, bedding material, backfill material, pipe and other construction material, garbage, etc., shall not be placed in or allowed to enter the existing Public Wastewater System.

B. The Contractor shall conduct operations and provide adequate controls to exclude this debris and material from the system.

C. Any debris or construction material that does enter the existing Public Wastewater System shall be removed by Ash Creek SSD at the Contractor's expense.

D. Any costs incurred by Ash Creek SSD in removing the debris or construction material will be billed to the Contractor and must be paid prior to final project acceptance.

E. Any wastewater overflows or damages to structures affected by wastewater backups caused by the actions of the Contractor shall be the responsibility of the Contractor and the Developer to mitigate. To include, but not be limited to regulatory fines, clean-up and reporting fees, and mitigation of damages.

F. A video inspection of the cleaned downstream lines demonstrating that the debris and construction material has been removed shall be performed by Ash Creek SSD and shall be paid for by the Contractor.

6.3.3 Maintaining Existing Wastewater Flows

A. Wastewater flows in the existing wastewater system shall be maintained at all times.

B. Bypass pumping, temporary bypass piping, or other means required to divert wastewater flow around the construction site shall be provided by the Contractor.

C. Placing a plug and allowing wastewater to back up in existing wastewater lines will not be allowed.

D. A bypass plan shall be submitted to Ash Creek SSD for review and approval prior to the start of construction.

E. Bypass plans using pumping equipment shall include continuous (24 hr./day) monitoring of the pumping equipment.

F. Bypass plans using pumping equipment shall include backup or redundant pumping and piping systems, as approved by Ash Creek SSD, in the event the primary system fails.

6.3.4 Isolation of New Construction

A. At the start of construction of Public Wastewater System Extensions and Modifications, the Contractor shall install and maintain a plug near the connection of the new construction to the existing Public Wastewater System. The plug shall isolate the new system under construction from the existing system.

B. The location of the plug shall be determined by Ash Creek SSD.

C. The plug shall be anchored to the apron of the manhole as approved by Ash Creek SSD.

D. The plug shall remain in-place until approval to remove the plug is given by Ash Creek SSD.

E. Removal of the plug shall be the responsibility of the Contractor.

F. Removal of the plug shall be witnessed by an Ash Creek SSD Inspector.

6.3.5 Record of Drawing Information Collected by Contractor

A. During construction of Public Wastewater System Extensions and Modifications, the Contractor shall record "As-Built" measurements and information.

B. Information measured and recorded shall include the following.

1. Private Laterals:

    a. Wye location on main line.
    b. Pipe size, slope, and length.
    c. Cleanout and bend locations and degree of bend.
    d. Horizontal distance ties from the end of the lateral stub to nearest side property line and from top back of curb.
    e. In the absence of established property lines and top back of curb, finished surface improvements, preferably sewer manholes or fire hydrants, shall be used.
    f. If no finished surface improvements are near the lateral stub, lateral markers shall be installed on nearby trees or features and horizontal distance ties to the maker provided.

2. Location of other utilities encountered.

C. The information recorded shall be incorporated into the Record Drawings as required in Section 3.7.

D. A set of the record information shall be maintained at the construction site.

E. An Ash Creek Inspector may periodically and independently measure, and record installed lateral information for the purpose of verifying submitted Record Drawing information.

6.3.6 Safety

A. In all cases, the contractor is responsible for safety.

B. The contractor shall be responsible for full compliance with applicable excavation and trenching regulations set forth by the U.S. Department of Labor Occupational Safety and Health Administration as administered by the Utah Occupational Safety and Health Division (UOSH) of the Utah Labor Commission.

C. The contractor shall assume full responsibility for all confined space requirements in US Department of Labor, OSHA Regulation 29 CFR Subpart AA, Confined Space in Construction, during construction of the line extension. Contractor is hereby informed that all gravity sewer lines and manholes, Low-pressure sewer valve vaults and flushing manholes, sewer force main valve vaults, wastewater pump station wet wells and other similar structures and features on Ash Creek SSD's wastewater collection system and treatment facilities and all similar new construction qualify as confined spaces according to the Federal Regulation. Entering confined spaces without following the requirements of the Confined Spaces in Construction regulations is prohibited.

D. The contractor shall furnish and maintain all necessary safety equipment, such as barriers, signs, warning lights, guards, gas monitoring and ventilation equipment to provide adequate protection for persons and property during all phases of construction.

E. The contractor shall give reasonable notice to the owners of public or private property and utilities when such property and utilities are within the construction area.

F. The contractor shall at all times observe and comply with all Federal, State, and local laws, ordinances, permits and regulations which will in any manner affect the work.

6.3.7 Materials Handling

A. All material to be incorporated into the project shall be transported, handled, and stored in a manner which will insure proper installation in an undamaged condition.

B. The contractor shall replace all material found to be defective or which has been damaged before inclusion in the work.

6.3.8 Installation of Precast Concrete Products

A. Precast concrete products shall not be installed within seven days of manufacture date.

B. The date stamped on the precast concrete product will be used as the starting date in determining this time period.

C. Any precast concrete product installed prior to completion of this seven-day period will not be approved by Ash Creek SSD and shall be removed.

6.4 Trench Excavations

6.4.1 General

A. Trench Excavation shall include every operation necessary for excavation of all materials of whatever nature within the designated limits of the trenches.

B. Contractor shall support and maintain the excavation with shoring, bracing, trench boxes or other methods.

C. Contractor shall provide for the uninterrupted flow of surface water.

D. Contractor shall protect all utilities, pipes, conduits, culverts, bridges and all other public and private improvements and property which may be endangered by the work. Contractor shall call for blue-staking of all utilities prior to commencing work and shall maintain the blue-stakes for the duration of the project.

E. Contractor shall provide temporary support, adequate protection, and maintenance of all underground and surface structures and other obstructions affected by the trench excavation. Any structure that has been disturbed shall be restored or replaced at the Contractor's expense.

6.4.2 Pavement Removal

A. All pavement removal shall be in accordance with applicable City, County, or State Standards and permits.

B. If not defined the asphalt shall be cut and removed an additional 6” from edge of trench and removed prior to replacing or patching asphalt.

6.4.3 Trenching

A. Alignment: Trench excavations shall be performed to the alignment and grade as indicated on the Approved Construction Drawings.

B. Trench Width

1. Trenches shall be excavated to provide adequate working space for proper pipe installation, jointing, and embedment.
2. Minimum sidewall clearance shall be 8".

C. Trench Depth: The trench shall be over-excavated to a minimum depth of 6" below the bottom of the pipe.

D. Fill Areas.

1. Trench excavations in fill areas shall extend to the level of native, undisturbed soil.
2. The area between the native, undisturbed soil and the normal bottom of trench shall be backfilled with suitable material in maximum 12" lifts and compacted to 95% of the Modified Proctor Density as determined by the compaction control test specified in ASTM D-1557 and verified by ASTM D-1556 or ASTM D-2922.
3. If fill areas were placed with appropriate lifts and compactive effort, evidence of that effort shall be provided to Ash Creek SSD prior to excavation.

E. Trenching Method.

1. The use of mechanical equipment will be permitted except in locations where machines may cause damage to existing structures, in which case, hand methods shall be employed.
2. The trenching method used, and the width of the trench excavated shall provide adequate space for proper installation of the pipe, manholes and other appurtenances. This shall include placement and compaction of bedding and backfill materials, jointing of pipe and manholes, and haunching of pipe.

6.4.4 Dewatering

A. All excavations shall be dewatered before any construction is undertaken.

B. Pipe shall be laid only in dry trenches.

C. Concrete shall be placed only on dry, firm foundation material.

D. The Contractor shall have adequate dewatering equipment on-site.

E. Groundwater shall not be allowed to enter the Public Wastewater System.

F. All trenches shall be kept free from water during excavation, fine grading, pipe laying, jointing, and embedment operations. Surface water shall be prevented from entering trenches.

G. Where the trench bottom is mucky or otherwise unstable because of the presence of ground water, and in cases where the static ground water elevation is above the bottom of any trench or bell hole excavation, such ground water shall be lowered to the extent necessary to keep the trench free from water and the trench bottom stable when the work within the trench is in progress.

H. The contractor shall provide and maintain at all times during construction, adequate means and devices with which to promptly remove and dispose of all water entering the excavations or other parts of the work. Ground water shall not be allowed to rise around pipe installations until the trench is backfilled.

I. The contractor shall dispose of the water from the work in a suitable manner without damage to adjacent property. No water shall be drained into work built or under construction. Water shall be disposed of in such a manner as not to be a menace to the public health.

J. De-watering for pipelines shall commence when ground water is first encountered and shall be continuous until such time as water may be allowed to rise in accordance with the provisions of this section.

K. Where ground water is present manholes shall be double flex joint sealant sealed at all cleaned joints and after manholes are stacked, joints will be wrapped 6-inches above and 6-inches below each joint with mastic sealant or equal. See Section 5.4.M. Pipes, where they enter the manhole, shall be double banded.

L. The use of Clay Dams to control ground water shall be determined on a case-by-case basis.

M. If trenches cannot be dewatered, then:

1. Trench shall be over excavated a minimum of one (1) foot.
2. 4” minus granular placed.
3. Then pee gravel placed as the pipe foundation.
4. Additional clay dams shall be placed as determined to prevent water conveyance.

6.4.5 Blasting

A. The Contractor shall comply with all Federal, State, and City laws, rules and regulations governing the keeping, storage, use, manufacture, sale, handling, transportation, or distribution of explosives used for blasting operations.

B. The Contractor shall be responsible to secure blasting permits from the appropriate City Building Department, Washington County Building Department, and the appropriate Fire District, as required, prior to blasting.

6.4.6 Borings and Casings

A. Borings and casings shall meet the requirements of Section 4.6, Section 4.7, and Section 5.9.

B. The proposed boring method, qualifications and experience of the boring contractor, and other boring related information, as required by Ash Creek SSD, shall be submitted for approval by Ash Creek SSD prior to mobilizing the boring operation.

6.5 Pipe Embedment

6.5.1 General

A. Bedding material meeting the requirements of Section 5.8 shall be placed and compacted from the bottom of the excavated trench to the bottom of the pipe.

B. Bedding material shall extend a minimum depth of 6" below the bottom of the pipe.

C. After placement of the pipe, additional bedding material shall be placed in maximum 6" lifts to the spring line of the pipe.

D. The bedding material shall be shovel sliced and compacted in the pipe haunch areas to insure uniform and continuous bearing along the pipe.

E. Initial Backfill meeting the requirements of Section 5.8 shall be placed and compacted in the trench simultaneously on each side of the pipe in 6" lifts for the full width of the trench in such a manner as not to damage or disturb the pipe.

F. Initial backfill shall be placed to a minimum depth of 12" above the top of the pipe.

6.6 Pipe Installation

6.6.1 General

A. Alignment and Grade: Non-pressurized pipe shall be laid to the alignment and grades indicated on the Approved Construction Drawings within the following tolerance limits.

   1. Horizontal Alignment: 2"
   2. Grade: ± 1/2"
   3. When installed at minimum allowable slopes, as defined in Section 4.3.C, the variation in grade listed above shall not be applicable.
   4. Obvious bellies, low spots in pipe segments or abrupt changes in grade shall be corrected.
   5. Flat or reverse grade lines or segments of lines are not acceptable.
   6. Ash Creek SSD reserves the right to require whatever action is necessary to correct (including replacement of all affected sections of line including manholes) any unacceptable items generated as a result of pipe installation at less than minimum allowable slopes or with other deficiencies in alignment or grade.

B. Pipe shall be laid in a straight line at a constant and uniform slope between manholes on main lines and between bends on Private Lateral lines.

C. A pipe laser shall be used to install all pipe, without exception.

D. Pipe laying shall begin at the lowest elevation and proceed upstream with the bell end of bell-and-spigot pipe positioned upstream.

E. The interior of all pipe and fittings shall be thoroughly cleaned before installation and shall be kept clean during installation and until the work has been accepted.

F. Pipe shall not be laid in water nor under unsuitable weather or trench conditions.

G. All field cuts shall be made at right angles to the axis of the pipe. All pipes shall be filed and beveled to remove roughness.

H. Pipe material shall be consistent between manholes unless specifically approved by Ash Creek SSD.

I. If a pipe coupling is required to install a lateral wye or manhole, the following requirements shall be met:

1. The pipe coupling shall meet the requirements of Section 5.7.

2. Clearance between pipes at the coupling shall be a maximum of 1/8".

3. Pipes shall be aligned to provide a smooth transition without a lip or misalignment at the joints.

4. Pipe shall be video inspected as soon as possible after backfilling to verify the above requirements.

J. Changes of pipe material shall be at the manhole unless otherwise approved by Ash Creek SSD. If a change of pipe material between manholes is approved by Ash Creek SSD, the following requirements shall be met.

1. The connection between different pipe materials shall be made with pipe couplings meeting the requirements of Section 5.7.

2. Clearance between pipes at the coupling shall be a maximum of 1/8".

3. Pipes shall be aligned to provide a smooth transition without any lip or misalignment at the joints.

4. Pipe shall be video inspected as soon as possible after backfilling to verify the above requirements.

K. Whenever pipe laying is stopped, the open end of the pipe shall be plugged with a watertight plug and the trench shall be properly backfilled to protect the pipe from floating.

L. If adjustment of the position of a pipe length is required after being laid, it shall be removed, re-laid and rejointed.

M. Any pipe that has floated due to water entering the trench shall be removed from the trench, the trench shall be re-bedded, and the pipe shall be re-laid as directed by Ash Creek SSD.

6.6.2 Pipe Laying

A. In addition to the above general requirements, all pipe installation shall comply with the specific requirements of the pipe manufacturer as follows:

1. PVC Pipe: ASTM D 2321 "Standard Recommended Practice for Underground Installation of Flexible Thermoplastic Sewer Pipe."

2. High Density Polyethylene (HDPE) Pipe: ASTM D 2321 "Standard Recommended Practice for Underground Installation of Flexible Thermoplastic Sewer Pipe."
3. All others as recommended by manufacturer.

6.6.3 Tracer Wire Installation

A. Tracer wire shall be installed directly on top of the pipe, along the entire length of all Low-Pressure lines, and force mains.

B. The tracer wire shall be attached to the pipe at maximum 5' intervals with duct tape or zip ties.

C. The tracer wire shall be continuous from manhole to manhole and shall terminate inside at the top of the manhole according to Detail Drawing “Pressure Line Connection to Manhole” in Appendix D.

D. Splices in the tracer wire between manholes using approved greased/silicone-based wire connectors will be allowed but shall be kept to a minimum.

E. A successful continuity test on the installed tracer wire according to Section 6.16.8 will be required.

6.6.4 Marking Tape Installation

A. Marking tape shall be installed vertically above the pipe, along the entire length of all sewer pressure lines.

B. The marking tape shall be located at a depth of 12” above the top of pipe. See Detail Drawing “Typical Trench Detail” in Appendix D.

C. The marking tape depth shall be consistent along the entire length of the line.

D. Where other utilities are crossed, a second strip of marking tape may be required between the utility and the wastewater line.

6.6.5 Connecting to Pipe Stubs

A. The Contractor shall verify that existing pipe stubs are acceptable (i.e., condition, alignment, grade, leakage) prior to connecting to the stub.

B. To the extent possible, the acceptability of the stub shall be verified by Ash Creek SSD.

C. Unacceptable main line stubs shall be removed and replaced with new pipe to the manhole or to a location on the stub where the remaining pipe to the manhole is acceptable.

D. Unacceptable Private Lateral stubs shall be removed and replaced to the main line or to a location on the stub where the remaining pipe to the main line is acceptable.

E. The extension of main line pipe stubs shall be accomplished with pipe having the same type, size, and joint type as the existing stub to the next manhole.

F. If new pipe material matching the material of the existing stub is no longer available, then a change of pipe material may be approved by Ash Creek SSD.

6.6.6 Installing Private Lateral Stubs

A. Private Lateral Wastewater Line stubs installed as part of the main line construction shall be extended at the slope and to the length or location indicated on the Approved Construction Drawings.

B. Private Laterals shall be placed straight and erect and stubbed 3’ above rough grade and marked as indicated below.

C. Lateral stub trenches that require either blasting, rock sawing, rock hammering/chipping, or similar techniques for trench excavation shall be over excavated to a minimum of 5' beyond the installed stub end to allow re-excavation and extension of the lateral without damage to the existing lateral stub

D. Connection to Main Line.

   1. The connection of Private Lateral Wastewater Lines to the main line shall be an in-line wye or tee branch made specifically for wastewater lateral connections per the standard details in Appendix D “Sewer Service Connection”.

   2. The wye or tee shall be turned up so that the invert of the wye or tee branch at the connection is at or above the spring line of the main line.

E. Caps: All stubs shall be plugged at the end of the pipe with a glued, fused or approved gasketed cap or plug. Expansion type (Brandt™) plugs shall not be used.

F. Private Lateral Stub Marker.

1. Immediately following installation of the Private Lateral stub, a Private Lateral stub marker (t-post) shall be installed by the Contractor.

2. The marker (t-post) shall be placed straight and erect extended upward 3' above rough grade.

3. The exposed portion of the marker shall be painted green.

4. Record Drawing information required by Section 3.8 shall be collected.

5. Private Lateral markers disturbed or lost prior to Final Approval shall be reset using accepted survey practices and procedures.

G. Lateral and marker (t-post) shall be in-place and visible at the Final Inspection.

6.7 Trench Backfill and Paving

6.7.1 Trench Backfill in Roads

A. If settlement of pavement over installed wastewater lines is observed at the final inspection or warranty inspection, the contractor shall remove the settled pavement and any unsuitable or uncompacted backfill, replace the backfill with appropriate compaction efforts, and reinstall the pavement.

B. Trench backfill in public or private roads, streets and rights-of-way shall be in accordance with the applicable City, County, or State standards, permits, and/or as designated on Approved Construction Drawings. The responsibility for compaction testing shall be with the developer and their contractor.

C. Trench backfill in privately owned paved areas, such as parking lots and driveways, shall be placed such that settlement of the paved areas over the wastewater line trenches does not occur. The responsibility for any necessary compaction testing shall be with the developer and their contractor.

D. Backfill shall be carefully placed around and over pipes and shall not be permitted to fall directly on a pipe from such a height or in such a manner as to cause damage.

E. The backfill in all sewer/utility trenches shall be compacted. The in-place density shall be a minimum of 95 percent of laboratory standard maximum dry density as determined by ASTMD-1557

F. Backfill material shall be approved by Ash Creek SSD and shall not contain any wood, grass, roots, broken concrete, trash or debris of any kind that may cause unequal settlement or improper consolidation. No gravel larger than 1 inch as a mixed aggregate shall be used at the pipe zone.

G. Backfill procedure above the pipe zone shall be as follows: the backfill above a point 1 foot above the top of the pipe shall be backfilled in horizontal layers 12 inches thick or less with materials containing no brush, perishable or objectionable material, rocks, stones, or boulders larger than 4 inches in the greatest dimension.

H. When directed by Ash Creek SSD, mechanical compaction shall be completed in accordance with the following:

1. Structural and trench backfill shall be deposited in horizontal layers and compacted so that the compacted material will be homogenous and free from lenses, pockets, streaks, and other imperfections.

2. The excavation and filling operations shall be such that the materials when compacted will be blended sufficiently to secure the best practicable degree of compaction, impermeability, and stability. Prior to and during compaction operations, material shall have the optimum moisture content and shall be uniform throughout each layer. Where feasible, moistening of the materials shall be performed at the site of excavation. If the moisture content is not optimum for compaction, the compaction operations shall be delayed until such time as the material has been brought to the optimum moisture content. When the material has been properly conditioned, it shall be compacted using mechanical equipment.

3. When hand compacted methods are specified or required because of the location. Approved hand compaction equipment shall be used.

I. In areas with known collapsible soils, a geotechnical report should be obtained. The report should provide a stabilization means to prevent settlement. Recommendations from the report should be followed.

6.7.2 Pavement Replacement

A. All pavement replacement shall be in accordance with the applicable City, County, or State standards, permits, and/or as designated on Approved Construction Drawings.

B. Pavement shall be cut and removed 6” beyond the trench wall or 6” beyond ripped asphalt.

C. For Ash Creek SSD projects, asphalt shall be replaced 7’ on either side of the sewer center line where asphalt exists. Contractor will be responsible for damages to and replacement of asphalt outside of the 14’ width.

6.8 Trench Dikes

6.8.1 General

A. Trench dikes shall be constructed at the locations indicated and in accordance with details as shown on the Approved Construction Drawings and standard detail drawings.

B. Additional trench dikes may be required at other locations to prevent migration of ground water along the sewer trench as determined and directed by Ash Creek SSD.

6.8.2 Construction Method

A. Trench dikes shall be constructed of cement treated fill material or clay.

B. Placement of the cement treated fill material shall occur after pipe installation and placement of bedding and initial backfill material.

C. The trench dike shall be keyed into undisturbed soil a minimum 12" below the bottom of the pipe embedment material (18" below bottom of pipe) and a minimum 12" beyond each side of the excavated trench.

D. The trench dike shall extend a minimum 12" above the top of the pipe embedment (24" above the top of pipe).

E. Care shall be taken while placing the cement treated fill material to assure that displacement or distortion of the pipe does not occur.

F. The area around the trench dike shall remain dewatered for a period of 24 hours after placement of the cement treated backfill material and until the backfill is brought to approximate final grade.

6.9 Manholes

6.9.1 General

A. Manholes shall be constructed at the locations indicated and in accordance with details as shown on the Approved Construction Drawings and standard detail drawings.

6.9.2 Subgrade

A. Manholes shall be constructed on a stable foundation capable of supporting the imposed loads.

B. A minimum 6" depth of bedding material shall be placed, leveled, and compacted prior to placing the manhole bases.

6.9.3 Manhole Bases

A. Precast Concrete Bases:

1. Shall meet the requirements of Section 5.4.B.
2. Shall be placed to be fully and uniformly supported in proper horizontal and vertical alignment.

B. Cast-in-Place Bases on Existing Lines: (prior approval required)

1. Before installation, contractor must meet with the Ash Creek SSD inspector to discuss and confirm installation.
2. Shall meet the requirements of Section 5.4.C.
3. Shall be constructed to be fully and uniformly supported in proper horizontal and vertical alignment. See Detail Drawing “Cast-In-Place Manhole Base” contained in Appendix D.

C. Installation of pipe in manhole bases with flexible pipe connectors shall be per manufacturer's recommendation.

D. Installation of pipe in manhole bases where use of a flexible pipe connector is not possible, as approved by Ash Creek SSD, shall include a pipe to manhole adapter placed around the pipe and centered on the manhole wall and grouted with non-shrink grout to form a watertight seal.

E. In all cases, a watertight manhole to pipe connection is required.

F. Installation of a manhole base on an existing lined pipe:

   1. Visual inspection by Ash Creek SSD is required prior to placing manhole base.
   2. Any annular space between the host pipe and the pipe lining shall be filled with an epoxy gel, installed per manufacturer's specifications.

6.9.4 Wall and Cone Sections

A. Precast wall and cone sections shall be placed and aligned to provide vertical sides.

B. The flat side of an eccentric cone shall be oriented over the outlet invert.

C. Steps are not permitted.

D. Joints:

   1. Mastic installed according to manufacturer's recommendations. See Section 5.4.M. Grouted joints shall not be used.
   2. Mastic shall be installed when the temperature of the material is above 70 degrees to assure a watertight seal. Heating of the material may be required to achieve a proper seal.

6.9.5 Backfilling Manholes

A. All backfilling shall be in accordance with the applicable City, County, or State standards, permits, and/or as designated on Approved Construction Drawings. See Section 5.8.

B. Backfilling shall be accomplished in a manner to prevent damage or disturbance to the installed manholes.

C. Manhole sections disturbed during backfilling shall be removed, rejointed and restacked.

D. Manhole sections damaged during construction shall be replaced with new sections of the same material and from the same manufacturer.

6.9.6 Installation of Temporary Plywood Bottoms

A. Plywood bottoms shall be placed in the manholes after the TV Inspection in order to protect the system from debris resulting from the paving and manhole adjustment process.

B. The plywood bottoms shall remain in place until after the final inspection and removal is authorized by Ash Creek SSD.

C. Temporary removal of the plywood bottoms may be necessary during the preliminary inspection and during correction of deficient items on the preliminary "punch list" but shall be immediately replaced to protect the system.

D. Plywood bottoms shall be constructed of minimum 3/4" CDX plywood with adequate bracing to prevent sagging.

E. The plywood bottom shall be constructed in two or three pieces with a 1/8" maximum clearance at the joints.

F. The plywood shall be placed in the manhole bottom such that the joint is perpendicular to the flow channel.

G. A means to prevent the plywood from shifting out of place, such as 2x4's attached to the plywood, metal, or rope hinges, etc., shall be incorporated. The plywood bottom shall be placed above the crown of all pipes entering the manhole.

H. Removal of the plywood bottoms shall be the responsibility of the Contractor.

I. All debris collected on the plywood bottoms shall be removed from the manhole prior to removal of the plywood bottoms.

6.9.7 Adjustment of Manhole Frame and Cover to Final Grade

A. Manholes in Asphalt Paved Areas.

   1. Manholes located in asphalt paved areas shall be raised to final grade after final paving is completed.

   2. Shall conform to standard details in Appendix D "Manhole Adjustment to Grade".

   3. The top of the manhole frame shall be 1/8" – 1/4" below and parallel to the plane of the asphalt paving at the outside edge of the collar.

4. The distance from the top of the cone to the top of the frame shall generally not exceed 22" and the height of the Plastic Riser Form shall not exceed 16”. Distances greater than 22" from the top of the cone to the top of the frame require specific approval by Ash Creek SSD and will require use of an Expanded Polypropylene grade ring per Section 5.4.E. In no case shall the distance exceed 24". Distances greater than approved will require the addition of a manhole wall section and retesting.

5. The distance from the top of the cone to the lowest point on the bottom of the frame shall not be less than 3". Any collars with a depth less than 12” shall have a ring of 4” rebar or fiber mesh.

6. Prior to paving, a manhole frame and cover or a circular metal plate shall be placed on top of the cone temporarily to prevent material from entering the manhole.

7. After the final lift of asphalt is placed, the asphalt and base course material shall be removed to accommodate a minimum 12" collar at the top of the manhole frame and to the level of the top of the cone and 6" outside the cone. The edge of the asphalt shall be smooth and uniform.

8. Manhole Adjustment with Whirlygig® or Approved Equal.

    a. Install per manufacturer’s recommendations and standard details.
    b. Set thermoplastic riser form in a bead of sealant meeting requirements of Section 5.4.F. to achieve a watertight seal between form and top of manhole cone.
    c. After the frame has been set to final grade, Class 4000 concrete shall be placed and consolidated in the excavated area around the cone, riser form and frame. Care shall be taken to assure that the thermoplastic form does not become displaced during placement of concrete.
    d. The concrete shall be allowed to cure for a minimum of seven days prior to allowing traffic over the manhole.

9. Metal adapter rings (risers) shall not be used for final adjustment of the frame on new development projects.

B. Manholes in Concrete Paved Areas.

1. Manholes located in concrete paved areas shall be raised to final grade after placement of concrete paving.

2. Shall conform to standard details in Appendix D “Manhole Adjustment to Grade”.

3. When installation is complete, the top of the manhole frame shall be 1/8” - 1/4" below and parallel to the plane of the surrounding concrete paving.
4. The distance from the top of the cone to the top of the frame shall generally not exceed 22" and the height of the Plastic Riser Form shall not exceed 16”. Distances greater than 22" from the top of the cone to the top of the frame require specific approval by Ash Creek SSD and will require use of an Expanded Polypropylene grade ring per Section 5.4.E. In no case shall the distance exceed 24". Distances greater than approved will require the addition of a manhole wall section and retesting.
5. The distance from the top of the cone to the lowest point on the bottom of the frame shall not be less than 3". Any collars with a depth less than 12” shall have a ring of 4” rebar or fiber mesh.
6. Prior to paving, a manhole frame and cover or a circular metal plate shall be placed on top of the cone temporarily to prevent material from entering the manhole.
7. Prior to placement of concrete pavement, block out area around the manhole adequate for manhole adjustment.
8. After concrete pavement is placed, the base course material shall be removed to a diameter a minimum 30" greater than the diameter of the top of the manhole frame and to the level of the top of the cone and 6" outside the cone.
9. Manhole Adjustment with Whirlygig® or Approved Equal.
    a. Install per manufacturer’s recommendations and standard details.
    b. Set thermoplastic riser form in a bead of sealant meeting requirements of Section 5.4.F. to achieve a watertight seal between form and top of manhole cone.
    c. After the frame has been set to final grade, Class 4000 concrete shall be placed and consolidated in the excavated area around the cone, riser form and frame. Care shall be taken to assure that the thermoplastic form does not become displaced during placement of concrete.
    d. The concrete shall be allowed to cure for a minimum of seven days prior to allowing traffic over the manhole.
10. Metal adapter rings (risers) shall not be used for final adjustment of the frame on new development projects.

C. Manholes in Roadway Shoulders.

1. Shall conform to standard details in Appendix D “Manhole Adjustment to Grade”.
2. Roadway shoulders without curb.
    a. Adjustment to final grade shall occur after placement of pavement around manhole.
    b. Adjustment shall meet the requirements of Section 6.9.7.A or 6.9.7.B.
3. Roadway shoulders with curb.
    a. The top of manhole frames shall be set horizontal and flush with the finished grade.
    b. A standard Manhole Collar conforming to standard details in Appendix D shall be placed around the frame.
    c. The distance from the top of the cone to the top of the frame shall generally not exceed 22" and the height of the Plastic Riser Form shall not exceed 16”. Distances greater than approved will require the addition of a manhole wall section and retesting.

D. Manholes in Off-Road Areas.

1. Shall conform to standard details in Appendix D.
2. Grading around the manhole shall not result in a depressed area around the manhole.
3. The manhole frame shall be placed directly on the manhole cone or adjusted to grade according to the requirements of Section 6.9.7.C. When the frame is placed directly on the cone, the joint between the cone and frame shall be made by placing mastic around the cone, placing the frame, and applying pressure to distribute the mastic material and form a watertight seal.
4. Mastic shall be installed when the temperature of the material is above 70 degrees to assure a watertight seal. Heating of the material may be required to achieve a proper seal.
5. A standard Manhole Collar conforming to standard details in Appendix D shall be installed around the frame and cone.

E. Manholes in Concrete or Asphalt Walkways.

1. When installation is complete, the top of the manhole frame shall be flush with the surrounding walkway and lids shall be smooth.
2. Adjustment shall meet requirements of Section 6.9.7.A or 6.9.7.B.

F. Adjustment of Existing Manholes

1. Shall conform to standard detail in Appendix D "Manhole Adjustment to Grade".
2. Remove all grade rings, concrete collars and other adjustment material to top of cone.
3. Clean and repair the top of cone, if necessary, to provide clean, smooth surface for placement of new adjustment material.
4. Repair of top of cone may require cutting down or grinding top surface of cone, patching with approved patch material or a combination of both.
5. Adjust frame to final grade in accordance with Sections 6.9.7.A thru E.
6. If distance from top of cone to top of rim exceeds 20", up to three – 6" expanded polypropylene grade rings per Section 5.4.E. installed per manufacturer's recommendations may be installed in addition to the plastic riser form.

6.9.8 Drop Manholes

A. Ash Creek SSD does not approve the use of drop manholes.

6.9.9 Connection to Existing Manhole

A. Prior to the start of construction, the condition of the existing manhole shall be assessed by Ash Creek SSD.

B. If the existing manhole is determined by Ash Creek SSD to be suitable for core drilling the following procedure shall be followed:

1. The existing manhole wall and bench shall be core drilled to allow for placement of the new pipe and flexible pipe to manhole connector (boot) in the manhole at the design elevation and provide a channel in the bench for the new line.
2. The Ash Creek Inspector shall witness all core drilling of manholes.

3. A flexible pipe to manhole connector (boot) shall be installed in the core drilled wall to provide a watertight seal.
4. The existing bench shall be built up with class 4000 concrete anchored to the existing concrete with stainless steel anchors or as otherwise directed by the Ash Creek SSD Inspector to provide a full depth channel from the new pipe to the existing channel as directed by the Ash Creek SSD Inspector.
5. Chipping, cutting, and grinding of the existing bench and channel and finishing with epoxy grout may be required, but not preferred.
6. The transition from the new invert to the existing invert shall be smooth and uniform and shall provide a long radius sweep to redirect flow to the existing downstream pipe.

C. If the existing manhole is determined by Ash Creek SSD to not be suitable for core drilling, the existing manhole shall be removed and replaced with a new manhole with precast base. Size of the manhole shall meet construction standard or direction of Ash Creek SSD.

D. During the connection of new sewer lines to existing manholes, the alignment of the existing precast sections, grade rings, and castings shall be maintained and the joints between sections, grade rings, and casting, lift holes and connections of existing inflow and outflow pipes shall be watertight.

E. The Contractor shall provide for continuous wastewater flow and shall prevent entrance of any ground water, storm water, debris or dirt into the existing facilities during this construction process.

F. The Contractor shall meet all the requirements for entry into a Confined Space as specified in Section 6.3.6.C.

6.10 Wastewater Pump Stations

6.10.1 General

A. Wastewater pump stations shall be constructed in accordance with the requirements of the Approved Drawings. See Section 7.0.

6.10.2 Startup Services

A. Prior to acceptance of the wastewater pump station, the manufacturers of all major equipment installed in the pump station, in conjunction with the contractor and Project Engineer, shall provide start-up services for the equipment.

B. Reports by the manufacturers confirming that the installation complies with the manufacturer's requirements shall be submitted.

C. All changes recommended by the manufacturer shall be completed.

D. A one-year warranty of the equipment shall be included in the report. The one-year warranty will begin on the date the pump station receives Final Project Approval by Ash Creek SSD.

6.10.3 Training

A. A minimum of 4 hours of training shall be provided by the manufacturers of all major equipment for Ash Creek SSD operation and maintenance personnel. Training shall be completed and organized in conjunction with the contractor and Project Engineer.

B. A proposed training outline and schedule shall be submitted by the Project Engineer for approval by Ash Creek SSD.

6.11 Repair of Existing Wastewater System

6.11.1 General

A. Existing wastewater lines, manholes and other appurtenances damaged or disturbed during construction shall be repaired or replaced by the Contractor at the Contractor's expense.

B. Notify the Ash Creek SSD Inspector 24 hours prior to making repairs. The inspector must be present during the repair.

C. Provide for pumping or diversion of wastewater around the damaged section as required.

D. The Contractor shall meet all the requirements for entry into a Confined Space as specified in Section 6.3.6.C.

6.11.2 Repair of Wastewater Lines

A. Cut and remove the broken pipe section. Locate the repair to reduce the number of repair couplings required.

B. Check remaining pipe for splits and cracks.

C. Remove the existing material below the pipe in the area of the broken pipe section to 6" below the bottom of the pipe.

D. Bedding material meeting the requirements of Section 5.8 shall be placed from the bottom of the excavated trench to the bottom of the pipe and compacted prior to placement of the pipe. Assure that the bedding material is worked under the existing pipe.

E. Insert new pipe section of the same pipe material, inside diameter and outside diameter.

F. The Contractor shall notify Ash Creek SSD if the same pipe material is not available, and a suitable replacement pipe material will be determined.

G. Clearance between pipes at the coupling shall be a maximum of 1/8".

H. Pipes shall be aligned to provide a smooth transition through the repaired section without any lip or misalignment at the joints.

I. Install pipe couplings meeting the requirements of Sections 5.7 and 6.6.1.I.

J. Additional bedding material shall be placed in maximum 6" lifts to the spring line of the pipe.

K. The bedding material shall be shovel sliced and compacted in the pipe haunch areas to insure uniform and continuous bearing along the pipe.

L. Prior to placing initial backfill above the spring line of the pipe, the alignment of the repaired pipe section with the existing pipe and the coupling installation shall be inspected to assure proper alignment and installation. If the repair is not properly aligned or installed, remove the couplings and reinstall the repaired section.

M. Initial backfill meeting the requirements of Section 5.8 shall be placed and compacted in the trench simultaneously on each side of the pipe in 6" lifts for the full width of the trench in such a manner as not to damage or disturb the pipe.

N. Final backfill above the pipe zone, and pavement replacement, shall meet the requirements of Section 6.7.

6.11.3 Repair of Manholes and Other Appurtenances

A. Remove damaged frame and covers, grade rings, wall sections or other features and replace with new materials. Reinstall new materials according to requirements of Section 6.9.

B. Remove disturbed frame and covers, grade rings, wall sections or other features and install new material according to requirements of Section 6.9.

C. Some existing manholes may have joints that do not match new manhole construction material. Ash Creek SSD shall review and approve the proposed method of connecting the new manhole material to the existing manhole. Exterior grout seal may be required.

6.12 Abandoning Existing Wastewater System

6.12.1 General

A. Existing public wastewater lines, manholes and other appurtenances and private lateral wastewater lines and appurtenances that are approved by Ash Creek SSD for abandonment shall meet the following requirements.

6.12.2 Abandoning Public Wastewater Lines

A. Ash Creek SSD approved pipe may be abandoned in place if pipe removal is deemed to be excessively cumbersome.

B. The line to be abandoned shall be filled with cement treated fill.

C. Contractor shall provide the means to deliver the cement treated fill to the full length of the line to be abandoned, as approved by Ash Creek SSD.

D. Cement treated fill shall be introduced into the line through an up-gradient manhole that is being abandoned or an excavated up-gradient end of pipe to facilitate flow of material to the full pipe length.

E. Alternatively, the pipe may be removed and disposed of by the Contractor and the excavated area backfilled with compacted granular fill.

6.12.3 Abandoning Manholes

A. As a minimum the manhole frame and cover, grade rings or other manhole adjustment material, and cone or flat slab lid shall be removed and disposed of by Contractor.

B. The manhole shall then be filled with cement treated fill.

C. Alternatively, the entire manhole, including base and wall sections may be removed and disposed of by Contractor and the excavated area backfilled with compacted granular fill.

D. In certain limited cases and as approved by Ash Creek SSD, where removal of the cone section is not possible due to conflicts with adjacent utilities, structures or other features, the cone or flat slab lid may be left in place.

6.12.4 Abandoning Private Lateral Wastewater Lines

A. The end of the pipe to be abandoned shall be capped with a glued cap, if PVC, or an expansion type "Brandt" plug if other type pipe material and the excavated area backfilled with compacted granular material.

B. Grease interceptors, sampling manholes and septic tanks shall be abandoned by one of the following methods:

   1. Crushed in place and the void filled.
   2. Completely filled with earth, sand or gravel (As a minimum, the lid shall be removed or crushed).
   3. Removal of entire structure.

6.13 Private Lateral Wastewater Lines

6.13.1 General

A. Private Lateral Wastewater Lines shall meet or exceed the minimum submittal and design requirements contained in Section 4.8.

B. It shall be the responsibility of the Property Owner and the Contractor to verify and/or determine the bury depths of the existing private lateral stubs and new private lateral extension. Factors such as elevation and surface features over the lateral (driveways vs. landscaping) should be considered.

C. The Ash Creek SSD Inspector shall witness all Private Lateral Wastewater Line installations before backfilling.

D. Buried Private Laterals not inspected, witnessed, or verified shall be re-excavated at the Contractor's expense. As approved by Ash Creek SSD, a video inspection of the installed private lateral meeting the requirements of Section 6.16.7 may be allowed in place of re-excavation of the buried pipe.

E. Existing Public Wastewater System lines shall remain in service while connecting Private Laterals.

F. Any damage to Public Wastewater System lines resulting from the connection of Private Laterals shall be corrected by the Contractor as directed by Ash Creek SSD at the Contractor’s expense.

G. The cost to remove any debris that enters the Public Wastewater System as a result of the connection of the Private Lateral shall be the responsibility of the Contractor.

6.13.2 Connection to Existing Private Lateral Stubs

A. Prior to connecting to or extending existing gravity or Low-Pressure Private Lateral stubs, it shall be the responsibility of the Contractor to verify acceptability of the existing stubs (condition, alignment, grade, elevations, depths, leakage, etc.). Non-functional stubs shall not be used. Ash Creek SSD shall be notified immediately and prior to making a connection to any stub found to be unacceptable.

B. The extension of Private Lateral stubs shall generally be accomplished with pipe of the same material and size as the existing stub.

C. A change in pipe material or size may be approved by Ash Creek SSD on a case-by-case basis.

D. Requirements for approved changes of pipe material.

    1. The connection between the different pipe materials shall be made with couplings meeting the requirements of Section 5.7.

    2. Clearance between pipes at the coupling shall be a maximum of 1/8".

    3. Pipes shall be aligned to provide a smooth transition without any lip or misalignment at the joints.

6.13.3 Connection to Existing Gravity Public Wastewater System Main Lines

A. The connection of Private Lateral Wastewater Lines to existing gravity main lines shall be made by installing a Private Lateral connection fitting meeting the requirements of Section 5.10.G.

B. A saw shall be used to core the existing main line. The edges of the cored hole shall be filed to remove burrs from the coring operation. Rough or jagged edges on the cored hole shall not be allowed.

C. The cored hole shall be large enough to prevent the formation of a lip between the saddle fitting and the main line.

D. The Ash Creek SSD Inspector shall witness the coring operation.

E. The invert of the saddle fitting shall be at or above the spring line of the main line.

F. Inserta Tee® Fatboy® sewer tap:

    1. Only to be used for lateral connections to lined pipe, with specific Ash Creek SSD approval.
    2. Sewer tap shall be custom built for the proper fit on the lining and host pipe.
    3. Sewer tap shall be installed per manufacturer's specifications.
    4. Any annular space between the host pipe and the pipe lining shall be filled with an epoxy gel and installed per manufacturer's specifications.
    5. Following the installation of the tap, and prior to backfilling, the main line shall be video inspected to verify proper installation.
    6. Connections to lined concrete or other rigid pipe shall require the removal of the host pipe 2" wider than the diameter of the sewer tap fitting. Sewer tap shall be placed on the pipe liner, with the annular space between the fitting and the host pipe filled with Class 4000 concrete.

6.13.4 Connection to Existing Public Low-Pressure Main Lines

A. The connection of Low-Pressure Private Lateral Wastewater Lines to existing Low-Pressure Main Lines shall be made by installing a Private Lateral saddle fitting meeting the requirements of Section 5.10.G.

B. The installation of the electrofusion branch saddle shall require the main line to be locally shut off (depressurized). Approval to shut off the main line shall be obtained by the Ash Creek SSD and must be coordinated with downstream users. The Ash Creek SSD Inspector shall witness the shut off of the main line and the installation of the electrofusion branch saddle.

6.13.5 Connection to Existing Manhole

A. 4” Private Lateral Wastewater Lines shall not connect directly to manholes but shall connect to a Public Wastewater System Line by way of a wye for new construction and an approved Saddle connection according to Section 6.13.3 for connections to existing public lines.

B. Connection of 6” and larger Private Lateral Wastewater Lines to existing manholes, where approved, shall be made in accordance with Section 6.9.9.

6.13.6 Cleanout Requirements

A. Cleanouts shall meet the requirements of Section 4.8.D.

B. Cleanout risers shall be the same size and material as the lateral.

C. Cleanout risers shall be located directly above the private lateral line. Offsetting or laying the cleanout riser over to avoid surfacing in a paved area or other obstruction shall not be allowed.

D. Cleanout risers shall be capped with a cleanout cap.

E. The top of the cleanout cap shall be located 4" to 6" below the finished paved or landscaped surface

F. Cleanouts within paved surfaces and unpaved traffic areas, shall be provided with a traffic rated cleanout frame and cover. In unpaved traffic areas, a concrete collar shall be installed around the frame and cover to provide additional protection for the cleanout riser.

6.13.7 Connection to Building Sewer

A. Connection of the Private lateral to the building sewer exiting the building shall be made with couplings meeting the requirements of Section 5.7.

B. Clearance between pipes at the coupling shall be a maximum of 1/8".

C. Pipes shall be aligned to provide a smooth transition without any lip or misalignment at the joints.

6.14 Grease Interceptors and Sampling Manholes

6.14.1 General

A. Grease interceptors, oil separators, sand interceptors and sampling manholes shall be constructed in accordance with the Standard Detail in Appendix D Grease and Sand Interceptor.

B. Grease interceptors, oil separators, sand interceptors and sampling manholes shall meet the submittal and design requirements contained in Section 4.9 and the material requirements contained in Section 5.10.H.

C. The frame and cover shall be adjusted according to the requirements of Section 6.9.7.

D. The distance from the top of the interceptor or separator concrete lid to the top of the frame shall not exceed 20". If this distance exceeds 20", a vault riser section shall be added to the interceptor, the concrete lid replaced, and the manhole retested.

E. Sampling manholes shall meet the requirements of Section 6.9.

6.16 Acceptance Testing for Public Wastewater System Extensions and Modifications

6.16.1 General

A. One or more of the following acceptance tests and inspections are required for Public Wastewater System Extensions and Modifications depending on the type of component being tested.

1. Visual inspection by the Ash Creek SSD inspector.
2. Low-pressure air test.
3. Hydrostatic Test.
4. Manhole leakage test.

5. Manhole vacuum test.
6. Continuity test of tracer wires.
7. Visual inspection of removed and extracted heat fusion bead on HDPE pipe.
8. TV inspection.
9. Pump station and force main testing.
10. Compaction testing.
11. Deflection testing

B. All costs associated with testing and TV Inspections, including retesting and reinspection, shall be the responsibility of the Developer or Contractor.

C. All tests and TV Inspections shall be witnessed by the Ash Creek SSD Inspector.

D. The contractor shall give the Ash Creek SSD Inspector two working days' notice of any test or inspection to be performed.

E. Testing firms and TV Inspection firms shall be approved by Ash Creek SSD prior to the testing or inspection. The Contractor shall confirm the status of the testing and TV Inspection firms with Ash Creek SSD prior to the Contractor authorizing testing or inspection.

F. Contractor, testing firm or TV Inspection firm shall provide all plugs, compressors, pumps, gauges, water, video equipment, etc., required to perform tests and TV Inspections.

G. All testing and TV inspection, with the exception of compaction testing, shall occur after backfilling of all pipe and manholes and all other utility pipe (i.e. gas, water, etc.) installation is completed but prior to paving.

H. Test Results Form.

1. Each item tested shall be noted on a form upon request. See Appendix B.
2. Acceptances, failures, reasons for failure, and retests shall be shown on the form.
3. The completed form shall be submitted to Ash Creek SSD.

I. A passing test is required on each item tested.

J. Items failing any test or TV inspection shall be repaired or replaced according to the requirements of Section 6.17.8 and the test or inspection repeated until successful performance of all tests and inspections is achieved.

K. Any testing nullified by repairs or replacements of any component shall be re-done and passing tests achieved.

6.16.2 Visual Inspection

A. A visual inspection by the Ash Creek SSD Inspector of the installed pipe, manholes, laterals, and other features on the Public Wastewater System Extension or Modification is required.

B. The visual inspection shall include all items discussed in Section 6.1 and shall verify that the system has been installed according to these Ash Creek SSD Standards.

6.16.3 Low-Pressure Air Test

A. A Low-Pressure Air Test shall be performed on the following installed pipes after all other utilities have been installed.

   1. The full length of each installed section (manhole to manhole) of gravity flow Public Wastewater main line.
   2. Private Lateral stubs installed in conjunction with the gravity flow main line.
   3. Gravity flow main line stubs.
   4. Gravity flow private lateral stubs connecting directly to a manhole.

B. Method of Testing.

   1. The reach or span of pipe to be tested shall be isolated by completely blocking all outlets in the section under test. Careful attention must be given to blocking all plugs. The pipe must be wetted to minimize any loss of air through the pipe wall as a result of permeability in the dry condition. One of the plugs used at the manhole must be equipped to control the air entry rate and to prevent the pressure from exceeding 5 psi. This can be done by means of a blow off valve set to operate at 5 psi.

2. Stabilization period:

    a. After the pipe has been wetted and plugs installed, the air should be allowed to slowly fill the pipe until a constant pressure of 4.0 psi is attained. After 4.0 psi is attained, the air hose is disconnected, and pressure maintained for at least 2 minutes.
    b. Check during this 2-minute stabilization period, with a soap solution, all plugs and exposed fittings. If a leak is found, bleed off the air, repair the leak and start a new 2-minute stabilization period.
    c. When the temperature of the air has reached equilibrium with that of the pipe wall, bring the air pressure to 4.0 psi and disconnect the air supply. The gauge is then watched at which time a stopwatch is started and then stopped with the 2-minute time lapse. If the pressure falls below 3.5 psi, then investigate the pipe to determine the nature of the air loss. If the air pressure remains above 3.5 psi, then proceed to the air test portion.

3. Air Test:

    a. Refill the pipe with a constant pressure of 4.0 psi if necessary. The pipeline may be considered to have passed the air loss test successfully if the loss of air is not greater than a rate of 0.5 psi for the duration of the test. The following table shows the allowable time for the pressure to go from 4.0 to 3.5 psi for respective pipe diameters.

Pipe	Time		Pipe	Time	
Diameter	**Min.**	**Sec.**	**Diameter**	**Min.**	**Sec.**
6"	3	00	18"	8	30
8"	3	45	20"	9	30
10"	4	45	21"	10	00
12"	5	45	24"	11	15
14"	6	30	27"	12	45
15"	7	00	30"	14	00
16"	7	30	36"	17	00

    b. If the time lapse exceeds that shown in the table, the pipe shall be presumed to be within acceptable limits; if the time lapse is less, the contractor shall make the necessary corrections to reduce the leakage to acceptable limits by repair methods.

6.16.4 Hydrostatic Test

A. A hydrostatic test shall be performed on the following installed pipes.
    1. Force Mains.
    2. Low-Pressure Sewer System main lines.
    3. Low-Pressure Sewer System main line stubs.
    4. Private Lateral stubs installed in conjunction with the Low-Pressure Sewer System main lines.

B. Prior to the hydrostatic test the line shall be flushed with an adequate flow volume and rate to remove any debris, silt, gravel, or other material in the line. The Ash Creek SSD Inspector shall witness the flushing operation.

C. Method of Test.
    1. C900 Pipe
        a. Test shall be conducted after the pipe has been installed and the line has been backfilled.
        b. The lines to be tested shall be slowly filled with clean water. Water added to maintain the pressure shall not exceed 0.4 gallons per inch diameter of pipe per 1,000 lineal feet being tested.
        c. All air in the system shall be expelled before the test. Air release taps shall be provided at the pipeline's highest elevations if necessary and air release valves installed. Insert approved permanent plugs after test has been completed.
        d. The specified test pressure, measured at the lowest point of elevation, shall be applied by means of a pump connected to the pipe in a satisfactory manner.
            1. The pump, pipe connection, gauges and all necessary apparatus shall be furnished by the contractor. Gauges and measuring devices must meet with the acceptance of Ash Creek SSD and the necessary pipe taps made as directed.

e. The pipe, unless otherwise directed by Ash Creek SSD, shall be subjected to hydrostatic pressure of not less than 200 pounds per square inch.

f. The duration of the test shall be 2 hours.

2. HDPE Pipe

a. Test shall be conducted after the pipe has been installed and backfilling has been completed but not sooner than a time which will allow sufficient curing of any concrete that many have been used. Typical minimum concrete curing times are 36 hours for early strength and 7 days for normal strength.

b. Test shall be conducted after the pipe has been installed and the line has been backfilled.

c. The test procedures consist of two steps: the initial expansion and the test phase. When test pressure is applied to a water filled pipe, the pipe expands. During the initial expansion of the pipe under test, sufficient make-up water must be added to the system at hourly intervals for 3-hours to maintain the test pressure. After about 4-hours, initial expansion should be complete, and the actual test can start.

d. When the test is to begin, the pipe is full of water and is subjected to a constant test pressure 1.5 times the system design pressure. The test phase should not exceed 3-hours, after which time any water deficiency must be replaced and measured. Add and measure the amount of make-up water required to return to the test pressure and compare this to the maximum allowance in the table below.

e. Under no circumstances shall the total time under test exceed 8-hours at 1.5 times the system pressure rating. If the test is not complete within this time limit (due to leakage, equipment failure, etc.), the test section shall be permitted to “relax” for 8-hours prior to the next test sequence.

1. Air testing is not recommended.

2. Above procedure taken from PPI Technical Report TR-31 by the Plastic Pipe Institute.

Allowance for Expansion Under Pressure

Nominal	U.S. Gallons/100 Ft of Pipe*		
Pipe Size	1 Hour	2 Hours	3 Hours
4"	0.13	0.25	0.40
6"	0.3	0.60	0.90
8"	0.5	1.00	1.50
10"	0.75	1.30	2.10
12"	1.1	2.30	3.40
14"	1.4	2.80	4.20
16"	1.7	3.30	5.00
18"	2.2	4.30	6.50
20"	2.8	5.50	8.00
22"	3.5	7.00	10.50
24"	4.5	8.90	13.30

* multiply by 11.53 to convert to liters/100 meters of pipe

D. Any cracked or defective pipes and fittings shall be removed and replaced by the contractor with sound material in the manner specified by these Standards.

E. The test shall be repeated until the line passes the pressure test and is accepted by Ash Creek SSD.

6.16.5 Manhole Leakage Test

A. A manhole water leakage test shall be based on observed manhole installation.

B. Manhole shall be filled with water.

C. The allowable leakage shall be 1.0 gallon per hour.

D. Any manhole that does not pass the test shall be repaired and retested until satisfactory results are obtained.

6.16.6 Manhole Vacuum Test

A. A vacuum test shall be performed on manholes installed in a well protection zone.

B. Each manhole shall be tested to the top of the cone/flat slab section.

C. Method of Testing: ASTM C 1244, Standard Test Method for Concrete Sewer Manholes by the Negative Air Pressure (Vacuum) Test.

6.16.7 TV Inspection

A. Ash Creek SSD provided TV inspection shall be at the present fee per linear foot. Contact the Ash Creek SSD Inspector for the project for pricing per foot.

B. A TV Inspection shall be performed after all other utilities have been installed.

C. A TV Inspection shall be performed on the following installed system.

   1. The full length of each installed section (manhole to manhole) of gravity flow Public Wastewater main line.
   2. Gravity flow main line stubs.
   3. Manholes.
   4. Where new manholes are installed on existing public wastewater lines, the connections to the new manhole and the existing wastewater lines 50 feet each side of the new manhole shall be TV Inspected.

D. The TV Inspection shall be performed after all other acceptance testing has been completed and passing tests are achieved.

E. The TV Inspection shall be performed after the lines have been thoroughly cleaned and all dirt, debris, and obstructions have been removed.

F. The TV Inspection shall be performed while water is in the pipes.

G. The video equipment shall provide adequate illumination of the interior of the pipe to produce a clear and viewable image.

H. The TV Inspection shall not be performed while steam or mist in the pipe obscures visibility. Venting of the line to remove the steam or mist will be required prior to proceeding.

I. Any debris on the camera lens that obscures the video shall be removed prior to proceeding with the TV Inspection.

J. TV Inspection video recordings shall be of an acceptable quality subject to the discretion of Ash Creek SSD. Inadequate results will require reinspection.

K. The TV Inspection video shall consist of a color digital video in electronic (thumb drive) format.

L. The TV Inspection video and supporting data for each section of line inspected shall include the following information.

1. Project name.
2. Date and time of inspection.
3. Camera direction (with flow or against flow).
4. Starting distance (0' at end of pipe at manhole wall).
5. Ending distance (to end of pipe a manhole wall).
6. Type of pipe.
7. Diameter of pipe.
8. Lateral connections; location (distance from manhole), orientation (12 o’clock to 11 o’clock), diameter.
9. Pipe and joint defects identified (type of defect and location).
10. Low spots or bellies and changes in grade identified (location of beginning and end).

M. All TV Inspection videos and supporting data shall be turned over to and become the property of Ash Creek SSD.

N. Evaluation Criteria.

1. Straight Alignments: Each section shall be straight and uniformly graded.

2. Curvilinear Alignments: Each section shall have uniform horizontal and vertical curves with no signs of distorted or irregular pipe.
3. Lines with debris, silt or other construction material will not be approved.
4. Lines that are flat or reverse grade or with a belly or low spot will not be approved.
5. Lines with damaged pipe, misaligned or displaced joints, or other defects will not be approved.
6. Lines with improperly installed Private Lateral wyes will not be approved.
7. Lines with improper connections to manholes will not be approved.
8. Lines with evidence of infiltration will not be approved.
9. Other defects, as determined by Ash Creek SSD, will not be approved.

O. Review of TV footage is required prior to asphalt. Any required correction shall be made prior to asphalt.

6.16.8 Tracer Wire Continuity Testing

A. A continuity test shall be performed on all tracer wire segments installed on sewer main lines.

B. The continuity test shall be performed after installation and backfilling of the sewer lines and prior to paving and adjustment of manholes.

C. The method of performing the continuity test shall be approved by Ash Creek SSD.

6.16.9 Visual Inspection of Heat Fused HDPE Pipe Bead Removal and Extraction

A. Removal and extraction of the HDPE pipe internal bead resulting from the heat fusion jointing process shall be required for all gravity flow HDPE pipe.

B. An Ash Creek SSD inspector must be on-site during the fusion operation to perform the visual inspection of the removed and extracted fusion bead.

C. The visual inspection shall include:

1. Verification that complete internal fusion bead removal was performed.

2. The extracted internal fusion bead appearance shall have the same double roll back appearance as the external fusion bead.
3. The extracted internal fusion bead shall possess a smooth root cut.
4. Removal of the internal bead may include pipe wall mass. However, any wall mass that is removed shall not exceed 1/10th of the pipe wall thickness.

D. Any joints not meeting the visual inspection requirements shall have the joint cut out, a new heat fusion joint made, and the interior bead removed and extracted.

6.16.10 Wastewater Pump Station Testing

A. 72-Hour Test.
   1. The pump station shall be operated continuously for a period of 72 hours without any failure. If a failure occurs, the 72-hour test period shall be restarted.
   2. The test shall be conducted with clear water provided by the Contractor. Recycling of the test water shall be provided to minimize the impact on the wastewater system.
   3. All equipment, valves, controls, etc. shall be successfully operated during the 72-hour test.

B. Electrical and Control System Testing.
   1. According to International Electrical Testing Association Incorporated (NETA).
   2. As recommended by equipment manufacturers.

6.16.11 Deflection Testing

A. Deflection testing shall be performed on wastewater main lines installed within a source protection zone.

B. Testing shall be conducted after the final backfill has been in place at least 30 days.

C. The deflection test is run by mandrel with a diameter equal to 95% of the inside diameter of the pipe. All mandrels will be tested for accuracy prior to performing deflection test.

D. Test shall be performed without mechanical pulling devices.

6.16.12 Failed Test Correction

A. Procedure.

1. Notify Ash Creek SSD Inspector of test failure.
2. Locate leak or defect location, expose, and identify defect.
3. Contact Ash Creek SSD for approval of the proposed correction procedures.
4. Evaluation is on a case-by-case basis.

B. General evaluation considerations for corrections are as follows.

1. Damaged main line, damaged wye, or defective joints.
    a. Within 3 pipe lengths or 30' of a manhole or other structure: remove and replace main line to the manhole or structure.
    b. Beyond 3 pipe lengths or 30' of a manhole or other structure: remove and replace the defective area or section. Make pipe coupling repair in accordance with Section 6.11.2.
2. Damaged Private Lateral stubs - remove and replace entire length of lateral stub from wye to end cap.
3. Damaged or defective manholes.
    a. Remove and replace the defective section(s), joint sealant material or other defective feature, re-stack the manhole, backfill and re-vacuum test.
    b. Repairs using supplemental sealants or surface grouting of wall sections without removing the sections are not acceptable repair methods and shall not be approved.
    c. Cracked, broken, misaligned, improper/noncompatible section shall be removed and manhole section or stack replaced.

6.17 Acceptance Testing for Private Lateral Wastewater Lines

6.17.1 General

A. One or more of the following acceptance tests are required for Private Lateral Wastewater Lines depending on the component being tested.

1. Visual inspection by the Ash Creek SSD Inspector.
2. Exfiltration test or low-pressure air test of all gravity flow private laterals.
3. Hydrostatic test of all Low-Pressure Sewer System private laterals and ejector pump pressure lines.
4. Exfiltration test or vacuum test of grease interceptors, sampling manholes and private exterior pump stations.
5. Dye test.
6. TV inspection
7. Exterior pump operation

B. All tests shall be performed or witnessed by the Ash Creek SSD Inspector.

C. The Contractor shall provide all plugs, compressors, pumps, gauges, water, etc., required to perform tests.

D. Additional tests may be required by Ash Creek SSD.

E. Defects identified by acceptance testing shall be repaired prior to backfilling, prior to the wastewater lines being approved, or prior to issuance of an authorization to use by Ash Creek SSD.

6.17.2 Visual Inspection

A. A visual inspection of the entire length of Private Lateral Wastewater Line, from the connection to the Public Wastewater System or Private Lateral Stub installed as part of the Public Wastewater System, to the connection to the building drain line, including clean-outs and other appurtenances, is required.

B. The visual inspection will include items contained in Section 6.2.

6.17.3 Exfiltration Test or Low-Pressure Air Test of Gravity Flow Private Laterals

A. An Exfiltration Test or Low-Pressure Air Test shall be performed on the following installed pipes.

1. The full length of each gravity flow Private Lateral Wastewater Line from the Test Tee installed at the connection to the Public Wastewater System or Private Lateral Stub installed as part of the Public Wastewater System, to the connection to the building sewer.
2. Cleanouts installed as part of the Private Lateral Wastewater Line.

B. Method of Testing:

1. Exfiltration Test. The Test shall be underway prior to the inspector arriving on-site.
    a. Install plugs in Test Tee and end of lateral line at connection to building drain line to isolate newly installed line.
    b. Install cleanout standpipe to a height 3' above finished grade.
    c. Fill lateral line with water to top of installed cleanout standpipe.
    d. Test shall be maintained as long as necessary to locate all leaks but not less than 15 minutes.
    e. Leakage shall not exceed 0.16 gallons/diameter inch/100 feet/hour.
    f. Pipe shall be dewatered upon completion of testing.
2. Low-Pressure Air Test: According to the requirements of Section 6.16.3.

C. Installation of additional test tees and performing tests in sections may be required for long private lateral lines or private lateral lines with a large elevation difference between each end.

6.17.4 Hydrostatic Test

A. A Hydrostatic test shall be performed on the following installed pipes.

1. Low-Pressure Sewer System private laterals.
2. Ejector pump pressure lines.

B. The full length of each Low-Pressure Private Lateral Wastewater Line or ejector pump pressure line from the Test Tee installed at the connection to the Public Wastewater System or Private Lateral Stub installed as part of the Public Wastewater System, to the connection to the building sewer or pump station shall be tested.

C. Method of Testing: According to the requirements of Section 6.16.4. The test pressure shall be 5 psi above the pump maximum rating and shall be held for 15 minutes. Pumping system

information that provides the pump maximum rating shall be provided to the Ash Creek SSD inspector.

D. The hydrostatic test for pressure lines from an ejector pump located interior to the structure shall be performed after the pressure line has been extended through the foundation wall and capped or connected to a closed valve.

E. The hydrostatic test for pressure lines from an exterior pump station shall be performed after the pressure line has been connected to the installed pump station and against a closed valve.

6.17.5 Testing of Pressure to Gravity Transitions

A. Testing of the pressure to gravity transition shall consist of a separate test of the pressure portion of the transition and a separate test of the gravity portion of the transition.

B. Testing of the pressure portion of the transition shall be a hydrostatic test per Section 6.16.4 performed prior to the connection of the pressure line to the gravity line.

C. The piping shall be arranged, and the testing performed such that the final connection into the pressure to gravity transition is a single cut or glue joint. Dis-assembly and re-assembly of any previously tested compression or threaded joint to make the final connection will invalidate the test.

D. Testing of the gravity portion of the transition shall be either a static head test or a low-pressure air test and shall occur after the pressure portion of the transition is successfully tested and connected to the gravity portion of the transition. The contractor should schedule two inspections, separated, to allow the glued joint adequate time to cure.

6.17.6 Exfiltration Test or Vacuum Test of Grease Interceptors, Sand/Oil Interceptors, Sampling Manholes and Private Exterior Pump Stations

A. An exfiltration test or vacuum test shall be performed on the following items.

1. Grease interceptor.
2. Sampling manhole.
3. Private exterior pump stations

B. Method of Testing:

1. Exfiltration Test: The Test shall be underway prior to the inspector arriving on-site.

    a. Install plugs as required to isolate newly installed grease interceptor, sampling manhole, or private exterior pump stations.
    b. Completely fill structure with water
    c. After water level has stabilized additional water shall be added to bring water level back to fill level.
    d. Test shall be maintained as long as necessary to locate all leaks but not less than 30 minutes.
    e. No drop in water level shall occur during the 30-minute test period.
    f. Any identified water leaks shall be addressed.

2. Vacuum Test: According to the requirements of Section 6.16.6.

3. Exfiltration or vacuum testing of private pump stations may be waived if the pump basin and pipe connections are factory installed and tested.

6.17.7 Dye Test

A. A dye test shall be performed on the following installed pipes.

1. Gravity flow Private Lateral Wastewater Lines.

2. Ejector pump pressure line connected to a gravity flow Public Wastewater line.

B. Method of testing for gravity flow lines.

1. The Ash Creek SSD Inspector will add dye to the water placed in the private lateral for the exfiltration test through the cleanout standpipe.

2. At the direction of the Ash Creek SSD Inspector, the plug in the test tee will be removed to release the dyed test water.

3. The Ash Creek SSD Inspector will observe the dyed test water as it passes the nearest manhole downstream to the connection of the private lateral to the Public Wastewater System.

4. If dyed test water is not observed at the nearest downstream manhole or if the flow characteristics of the dyed test water as it passes the nearest downstream manhole are unusual, the Ash Creek SSD Inspector will require a second dye test.

5. If the second dye test is also unsuccessful, the cause of the failed test shall be investigated by the Contractor, the problem causing the failed test shall be identified and corrected by the Contractor as approved by the Ash Creek SSD Inspector, and another dye test shall be performed.
6. A TV inspection of the lateral, performed at the cost of the Contractor, may be required to verify acceptability of the Private Lateral connection to the Public Wastewater System.

6.17.8 TV Inspection

A. A TV inspection of the lateral, performed at the cost of the contractor, may be required to verify acceptability of the Private Lateral connection to the Public Wastewater System.

B. The video equipment shall provide adequate illumination of the interior of the pipe to produce a clear and viewable image.

C. The TV Inspection shall not be performed while steam or mist in the pipe obscures visibility. Venting of the line to remove the steam or mist will be required prior to proceeding.

D. Any debris on the camera lens that obscures the video shall be removed prior to proceeding with the TV Inspection.

E. TV Inspection video recordings shall be of an acceptable quality subject to the discretion of Ash Creek SSD. Inadequate results will require reinspection.

F. The TV Inspection video shall consist of a color digital video in electronic or DVD format.

G. All TV Inspection videos and supporting data shall be turned over to and become the property of Ash Creek SSD.

H. Video shall include a footage counter.

6.17.9 Exterior Pump Operation

A. The operation of the exterior pump station shall be observed by an Ash Creek SSD inspector.

B. For pumps on Low-Pressure sewer system laterals, the pump supplier shall perform a pump start-up service.

C. For pumps on standard ejector pump pressure lines, dye is placed upstream of the ejector pump and the pump is operated until the dyed test water is observed at the nearest downstream manhole.

6.17.10 Failed Test Correction

A. Procedure.

1. Locate leak or defect location, expose, and identify defect.
2. Receive approval of the proposed correction procedures from the Ash Creek SSD Inspector.
3. Evaluation of the proposed correction procedures is on a case-by-case basis.

6.18 Cleanup

6.18.1 General

A. All surplus materials, tools, and any temporary structures shall be removed from the construction site by the contractor.

B. All rubbish, dirt or excess earth from the excavation shall be removed by the contractor at the earliest possible date and the construction site left clean and acceptable to Ash Creek SSD.

C. All components of the Public Wastewater System and Private Lateral Wastewater Lines shall be clean and free of any foreign material and will be subject to a high pressure, high volume water wash or a high pressure jet wash.

7.0 Wastewater Pump Stations

7.1 General Requirements and Policies

A. The Ash Creek SSD Wastewater Pump Station policy in Section 1.2.3.D shall be followed.

B. Wastewater pump stations shall meet the Utah Department of Environmental Quality, Division of Water Quality pump station design requirements as outlined in R317-3-3, Utah Administrative Code, Sewage Pumping Stations.

7.2 Development Procedures for Wastewater Pump Stations

7.2.1 Preliminary Design Report

A. Detailed calculations for the wastewater pump station and appurtenances shall be submitted for review and approval. At a minimum the following shall be included:

1. Description of design criteria to be utilized
2. Flow computations
3. Design calculations
4. Calculated system curves
5. Identification of right-of-way requirements
6. Number of property owners involved
7. Listing of permit requirements
8. Geotechnical investigation
9. Cost estimate based on unit costs of major elements of work.

B. In addition, the following design criteria shall be developed:

1. Site Development and drainage
2. Structural Design
3. Architectural Design
4. Hydraulic Analysis
    a. The hydraulic analysis shall include calculation of the system curve. The system curve shall be plotted on the pump curve with the operating point identified. Every effort shall be made to select a pump that operates at its best efficiency point. Peak and average flows shall be considered when selecting the appropriate pump. Pump manufacturer data sheets shall also be included in the preliminary design report submission.

b. The friction head shall be determined as accurately as possible taking into account all pipe and minor loses.

c. Engineer shall include in the calculations the net positive suction head available (NPSHA) as well as the net positive suction head required (NPSHR).

5. Mechanical Design
6. Electrical Design
7. Instrumentation and Process Control
8. Corrosion Control
9. Odor Control
10. Noise Control

7.3 Design Requirements

7.3.1 Pump Station Site Location

A. Topography

1. Wastewater pump station site selection shall be compatible with suitable site access, and soil capability with respect to land grading in conjunction with site development.

B. Accessibility

1. All wastewater pump stations shall be sited to allow access by all-weather surface roads capable of accommodating Ash Creek SSD vehicles and a 40-foot Vactor type truck with the nose of the vehicle over the wet well.

2. Site slopes or grades must be adequate to accommodate low-hanging hose reels on Vactor trucks.

3. Whenever possible, provisions shall be made for entry into traffic nose first.

4. All paved surfaces at the site shall be designed for the expected vehicular and equipment loads but shall not have less than 4 inches of asphalt and 6 inches of road base.

5. Unpaved surfaces at the site shall be designed for the expected vehicular and equipment loads but shall not have less than 6 inches of road base along with filter fabric and 1” minus gravel.

C. Land Use

1. Pump station sites shall conform to City land use requirements and zoning.

D. Aesthetics, Noise and Odors

1. Remoteness of the site and building setbacks shall be considered to provide minimal impact to neighboring properties.
2. Where pump stations are sited in proximity to developed areas, consideration should be given to minimizing noise from generators and ventilation fans.
3. Every effort shall be made in site selection to reduce potential odor pollution.

E. Overhead Clearance

1. Adequate overhead clearance shall be provided over the entire pump station site so that maintenance equipment does not interfere with overhead utilities or structures.

F. Site Improvements

1. Perimeter Block Wall and Gate
    a. All wastewater pump stations must have a minimum 8-foot-high perimeter block wall surrounding the lift station site. Block wall materials shall be approved by Ash Creek SSD.
    b. A 3-foot wide mangate as well as a double 10 foot wide (20 foot total) swinging gate shall be provided for access to the site. A 20 foot sliding gate may be allowed in lieu of the swinging gates if circumstances warrant. All gates must be capable of achieving full open position. All posts shall be steel set-in concrete.
2. Potable Water
    a. A potable water yard hydrant shall be installed within the pump station site near the wet well.
    b. The hydrant shall have a threaded spigot for a standard garden hose.
3. Grading
    a. On-site cross slopes should be limited to no greater than 4 percent away from the structures.

b. Site grading shall be designed to prevent local ponding and to provide drainage away from structures.

c. The site shall be graded so as to not create a low-point in relation to the adjoining properties.

4. Landscaping

a. Landscaping shall not be done within the site.

b. Perimeter landscaping shall be allowed as required by the City or the particular subdivision where the pump station is located.

5. Lighting

a. Exterior lighting shall be provided to adequately light the equipment area.

b. Lights shall be shielded to prevent spillage on to neighboring properties.

c. Exterior lighting shall be fitted with day/night sensors for automatic on-off operation as well as fitted with manual on/off switches.

d. LED is preferred.

G. Ownership

1. The property on which the pump station is located shall be deeded to Ash Creek SSD.

2. Construction and Operation costs shall follow the policy in Section 1.2.3.D

7.3.2 Pump Station Components

A. Pump Selection

1. All pumps shall be Gorman-Rupp surface mount, self-priming. Pumps shall also be centrifugal non-clog solids handling designed specifically for raw, unscreened domestic sanitary wastewater.

2. A minimum of two pumps, set in a line, each capable of pumping the total design flow, shall be provided.

3. Proper pump selection is critical and applications where pumps must operate near their shutoff head shall be avoided.

4. A complete back-up pump unit and/or a rotating assembly, as applicable, shall be provided in a crate ready for installation in the event that any of the pumps malfunction. Manufacturers recommended stock items packet shall also be included.
5. The pump station controls shall provide for automatic alternating of the lead pump.
6. A Gorman-Rupp vibration dampener pad should be provided for the pump skid.
7. In special cases, where approved by Ash Creek SSD, submersible pumps may be necessary. Such cases may include sites where the net positive suction head available (NPSHA) is less than the net positive suction head required (NPSHR). In such cases, submersible pumps shall be Hidrostal PreroClean self-cleaning pump sump.

B. Motor Selection

1. Motors shall operate on 460 Volt, 3 phase, 60 Hz electrical service.
2. Selected motor horsepower shall be sufficient to prevent motor overload over the entire range of the pump performance curve.
3. Motor starters greater than 10 HP shall be VFD.

C. Approach Manhole

1. The manhole just prior to the wet well shall be Polymer and 5 foot in diameter.
2. Shall serve as a common point of connection for all sewer pipes tributary to the pump station.

D. Wet Well

1. Structure
    a. Wet wells shall be Polymer with a minimum diameter of 10 feet.
    b. Shall be sized to provide adequate volume to prevent the excessive cycling of pumps.
        1. Volume shall be calculated to optimize pump operation to meet peak hour flow and minimum hour flow. The diurnal nature of wastewater flow as well as the pump manufacturer's recommendations regarding pump start frequency shall be

considered when determining the wet well volume. These calculations should be provided to Ash Creek SSD.

2. Every effort shall be made to prevent the wastewater in the wet well from becoming septic.
3. The wet well shall contain adequate vertical room for level sensing adjustments above and below the design levels.
4. Primary high-water alarm shall be set to wet well influent invert. A redundant high-water alarm shall be installed six inches above the primary high-water alarm.
5. Minimum elevation difference between control elevations is 12 inches.

2. Access
    a. Wet well access shall be through a standard ring and cover.
    b. Wet well access shall be sufficient to remove all equipment from the wet well, but in no case smaller than 36 inches by 36 inches.
3. Floor Slopes
    a. Wet wells shall have sloping sides to form a hopper at the bottom of the wet well in all areas outside of the dedicated sump.
    b. Slopes shall be approximately 1 to 1.
    c. Square corners should be avoided, and the flat portion of the wet well floor should be minimized.
4. Level Control System
    a. Levels shall be controlled by a continuously run bubbler system with a redundant back up float switch for a high-water alarm.
    b. Bubbler systems shall be manual purging and shall have a pressure gauge.
    c. Other types of level control may be used in lieu of the standard bubbler system with approval of Ash Creek SSD.

E. Flow Monitoring

1. Continuous measuring and recording of wastewater flow shall be provided at each pump station.
2. Flow metering shall be included in the SCADA system.

F. Odor Control

1. Some form of odor prevention/mitigation measures may be required based on the detention time of wastewater in the wet well.

G. Piping Systems

1. Pump Station Piping
    a. Pump suction piping velocity should be within the range of 4 to 8 feet per second.
    b. Pump discharge piping shall be sized to provide velocities in the range of 4 to 8 feet per section.
    c. Pump suction piping design and installation shall not permit the accumulation of air in the suction piping or induce excessive turbulence in the pump suction area.
2. Valves
    a. Each pump shall have isolation valves to permit the removal or maintenance of the pumps and check valves without affecting the operation of remaining pumps.
    b. Isolation valves shall be gate valves. Gate valves shall be 100 percent port opening. Larger gate valves shall have geared operators with hand wheels. Gate valves shall be positioned so that when closed, the valve body is isolated from the actively flowing portion of the piping system.
    c. Each pump shall have a high-quality swing check valve with an external swing arm.
    d. Check valves must be installed horizontally.

3. CamLock Cleanout
    a. An 8” camlock cleanout shall be installed. CamLock Cleanout detail sheet available upon request from Ash Creek SSD.

7.3.3 Force Main

A. Line Size
    1. Force Main shall be sized to provide a minimum velocity of 2.0 feet per second while minimizing head losses through the system during system operation.
    2. Force Mains shall be a minimum of 4 inches in diameter.

B. Design Friction Loss
    1. Friction losses through force mains shall be based on the Hazen Williams formula or other hydraulic analysis to determine friction loss.
    2. When the Hazen Williams formula is used, the design shall be based on a value of C equal to 120.

C. Design Pressure
    1. Force mains and fittings shall be designed to withstand normal pressure and pressure surges (water hammer).

D. Detailed Calculations
    1. Calculations for the Force Main shall be submitted with the pump station calculations.

E. Material
    1. Force Mains shall be C900 pressure rated pipe.
    2. No metal fittings are allowed.
    3. Fittings shall be epoxy coated and mortar lined ductile iron.

F. Alignment
    1. Force mains shall be located North and West of roadway centerline. Within the public right-of-way or in appropriate easements.

2. Force mains shall be located at least 5’ from toe of curb to eliminated disturbances during possible future repair of the line.
3. A minimum of 10 feet of horizontal separation shall be maintained between the force main and other utilities.

G. Minimum Line Depth

1. A 7-foot minimum depth of cover as measured from the proposed finish grade to the top of pipe is required.
2. A minimum of 18 inches of vertical separation shall be maintained between other utilities.
3. A continuous upward slope from the lift station to the discharge point is required. In the event that a high point cannot be avoided, an air release valve shall be installed. See Appendix F for Air Valve detail sheet.

H. Tracer Wire and Marking Tape

1. The horizontal location of the force main shall be identified with corrosion proof solid 14-gauge tracer wire extending from manhole to manhole.
2. Sewer marking tape shall be placed directly over and 1’ above the pressure sewer pipe. The ribbon shall be green in color and shall have clearly printed “Buried Sewer Line”.

I. Drain Line

1. Shall discharge to the wet well with an inline valve.

J. Appurtenances

1. Combination air valves shall be included in the design of the force main. See Appendix F for Air Valve detail sheet.
2. Combination air valves shall be installed at system high points, at significant changes in grade where air pockets can form and at intervals of 1,200 feet in long horizontal runs.
3. A manually controlled isolation valve shall be installed between the force main and the air release valve.

K. Force Main Termination

1. The force main shall terminate in a Polymer manhole.

    a. Termination manhole shall contain an odor control unit. See Section 5.4.Q

2. The flow transition from the force main to the gravity sewer shall be smooth and non-turbulent.

    a. The invert of the force main shall enter the manhole 0.2' above the invert elevation of the gravity line.

    b. The force main shall enter the manhole as near to 180 degrees from the gravity line as possible.

    c. The manhole base shall have a formed channel from the force main to the gravity outlet line to minimize disturbance of the wastewater entering the manhole.

    d. 4" and 6" force mains shall transition to an 8" gravity line. 8" force mains shall transition to a 10" gravity line and so forth.

L. Cleaning

1. All pump stations shall be provided with a "Y" branch and gate valve of adequate opening size within the pump station for the launching of a "pig" for cleaning of the pressure sewer line.

7.3.4 Pump Station Building

A. Pump Station Building: The emergency generator, pump and equipment controls, electrical panels, communication equipment, odor control equipment, etc. shall be housed in a vented weatherproof building. It shall be the responsibility of the Developer to obtain approval of the building and site improvements from the City planning and building departments. Buildings shall be required to meet the minimum architectural standards of the City or as directed by the Development or Ash Creek SSD.

B. Access

1. Door

    a. Key entry shall be required. Doors shall be openable from the inside without the use of a key or any special knowledge or effort.

b. Steel door sized to code with louvre.

c. Doors to be pained a non-shiny finish.

2. Roll-up Overhead Doorway

a. An overhead roll-up door Size 10’ by 10’ shall be installed over the wet well.

C. Structure

1. Building Size

a. Sized to contain all components and provide adequate space for maintenance and repair of components.

b. A minimum open space of 5 feet between pump components and the interior wall is required.

c. Geneva CMU Block construction with color to match City code or theme of the development.

2. Roof

a. Metal or tile roof with aluminum soffit and fascia.

b. Color to match City code or theme of the development.

3. Floor

a. Epoxy coated with chips.

4. Walls

a. Interior walls shall be painted white.

D. Maintenance

1. An overhead hoist on steel I beam will be installed to assist in maintenance of pumps.

2. Manual winches rated for weight to be lifted shall be provided. An electrical winch may be required for submersible pumps.

E. Lighting

1. Interior lighting shall be provided to adequately light the building and equipment area.
2. Exterior building lighting shall be provided over all entrance and roll-up doors.
3. A red emergency light with an audible alarm with a silence button shall be provided on the exterior of the building.
4. LED should be provided for all lighting.

F. Ventilation

1. Pump stations shall be provided with a separate ventilating system and shall be sized to provide a minimum of 12 air changes per hour.
2. Vandal proof air circulation vents of adequate size shall be near the floor.
3. Ventilation systems shall be capable of matching inside air temperature to outside air and shall automatically begin operation once inside air temperature reaches 90 degrees F. In addition to manual control, time clock operation of the ventilating fans shall be provided.
4. Ventilation shall be accomplished by the introduction of fresh air into the lift station under positive pressure.
5. The air shall be filtered.
6. Fans shall automatically come on whenever the light switch is turned ON.

G. Heating

1. Thermostatically controlled electric unit heaters shall be provided.
2. Heating systems shall provide adequate space temperature for maintenance personnel in cold weather.

H. Potable Water Supply

1. Water will be installed inside of building with a standard hose bib.
2. The potable water system shall be metered as required by the City water authority.

I. Electrical

1. Power Requirement
    a. Electric service shall be 480V 3-phase.
    b. Service shall be sized to allow all station fixtures, equipment, and pumps to operate together.
2. Lift Station Control Panel
    a. Control panels shall be enclosed in NEMA 4X watertight enclose panels.
    b. Adequate space shall be provided for mounting of bubbler controls and instrumentation as required.
    c. All switches, breakers, and wires shall be clearly marked or labeled.
    d. Standard control panel layout for 2 or more pumps shall be provided with the following section of panels:
        1. Power company metering and main breakers
        2. Circuit breakers and starters for unit heaters, portable pump, main wastewater pumps, fans, compressors, station power transformer and 240/120V panelboard.
        3. Flow recorder and pump controls including cycle counters and running time clocks that will measure in the hundredth position.
        4. Solid-state reduced voltage starters for constant speed main wastewater pumps.
3. Alarms
    a. All pump stations will be equipped with an audible and visual alarm outside of the building that will function with loss of power to the lift station.
    b. Any alarm from the motor control cabinet shall trigger exterior alarms.
4. Convenience Receptables.
    a. 120v, 1-phase receptables shall be provided within the pump station.
    b. One GFCI duplex outdoor weatherproof convenience outlet shall be provided.

5. Lightning and Surge Protection
    a. Transient voltage surge suppression rated at 80 KA minimum shall be provided at the service entrance.

J. SCADA System
1. SCADA shall be provided for all Wastewater Pump Stations.
2. SCADA System Input/Output requirements shall be site specific. Coordinate SCADA with Ash Creek SSD.
3. Ignition software should be utilized.
4. Allen Bradley PLC equipment should be utilized or equivalent as approved by Ash Creek SSD.
5. A fiber connection shall be provided.

K. Security Systems
1. The pump station equipment and controls shall be adequately protected with appropriate buildings and fencing to prohibit unauthorized entry by the public.
2. Where required by Ash Creek SSD, security systems shall be included at the wastewater pump station.

L. Signage
1. A 2’ by 2’ facility sign shall be provided with white background and bold black letters.
2. Sign should include the pump station name, address of the pump station, and Ash Creek emergency number.

M. Emergency Station Operation
1. An in-place, engine driven, emergency generator with an automatic transfer switch shall be provided at each pump station.
2. A piping connection for a portable pump with appropriate valving and a vault located connection shall be provided at the pump station to allow pumping of wastewater around the pump station. The valve vault shall be configured to allow the manual operation of valves and the connection of a portable pump to occur outside of the valve vault, thus eliminating the necessity of a confined space entry.

3. The generator shall be fueled by natural gas, if the natural gas supply is available near the pump station, or by diesel if natural gas is not available.

7.3.4 Documents and Construction

A. Construction Drawings shall be provided for review to Ash Creek SSD. Approval of Construction Drawings shall conform to section 3.0 Plan Design and Review.

B. For typical pump station material requirements see section 5.6 Wastewater Pump Stations.

C. An Operation and Maintenance Manual shall be submitted according to the requirements of Section 3.8 Operation and Maintenance Manuals.

D. Wiring Diagrams, Panel Drawings, and As Built Drawings shall be provided to Ash Creek SSD.

E. Start-up services and training on the completed pump station shall be completed according to the requirements of Section 6.10 Wastewater Pump Stations.

F. Acceptance testing of the completed pump station shall be completed according to the requirements of Section 6.16.10 Wastewater Pump Station Testing.

APPENDIX A

Pretreatment Survey

Ash Creek Special Service District

1350 S. Sand Hollow Road
Hurricane, UT 84737
Office: (435) 635-2348 Fax: (435) 635-8550
ashcreek@infowest.com

Industrial Wastewater Discharge Application

Questionnaire/Baseline Monitoring Report

Communication Information

Facility name, address telephone number and Email address.

_____

_____

_____

_____

Facility mailing address. If same as above, check_____

_____

_____

_____

Business Description

Type of business (vehicle maintenance, metal finisher, laundry, etc.)

_____

Standard Industrial Classification (SIC) Code: _____

Mobile Food Service Y/N (Circle one)

If yes, have you completed the Southwest Utah Public Health questionnaire Department's checklist. We will need a copy, including written approval from the commissary that's receiving your wastewater.

Normal days and hours of operation.

_____

Is operation seasonal? Y/N (Circle one) If yes describe:

_____

Number of Employees: _____

If applicable describe nature of and average production rate

_____

Wastewater discharge

Will this facility discharge waste other than from restrooms? Y/N (Circle one)
If yes describe discharge, source of waste stream, flow rates and expected pollutants in waste stream.

_____

_____

_____

Are any process waste streams treated? Y/N (Circle one)
If yes, describe treatment system

_____

_____

_____

Is discharge of any process waste stream intermittent_____ steady_____
Are process waste streams metered? Y/N _____
Spill prevention and control Y/N _____

_____

List amounts of any industrial chemicals and fluids stored on site. Use additional sheet if necessary.
All MSDS sheets associated with chemicals and fluids.

_____

_____

_____

_____

Describe storage facilities and proximity to any floor drains.

_____

_____

3 Bay Underground Grease Interceptor installed Y/N (Circle One)

Are there procedures/guidelines that would prevent accidental discharges to the sewer system? Y/N
If yes describe:

_____

_____

_____

Waste generation

List volumes generated and disposal methods for wastes such as solvents, oils, trap wastes, etc.

_____

_____

_____

I certify under penalty of law that this document and all attachments were prepared under my direction or supervision in accordance with a system designed to ensure that qualified personnel properly gathered and evaluated the information submitted. Based on my inquiry of the person or persons who managed the system or those persons directly responsible for gathering the information, the information submitted is to the best of my knowledge and belief, true, accurate and complete. I am aware that there are significant penalties for submitting false information including the possibility of fines and imprisonment for knowing violations.

_____	_____
Name (type or print)	Signature
_____	_____
Date	Title

For questions contact Jason Stevens (Inspector/Pretreatment Ash Creek SSD) at 435-635-2348 ext. 109 or email jason@ashcreekssd.com

APPENDIX B

Request for Inspection Form

Contractor / Owner					ASH CREEK SPECIAL SERIVCE DISTRICT REQUEST FOR INSPECTION	☐ PUBLIC DEVELOPMENT ☐ PRIVATE DEVELOPMENT
TIME	TAKEN BY				REQUESTED BY	ADDRESS
DATE	PERMIT #	PROJECT NAME	PROJECT #	TELEPHONE		TESTING FIRM

PLEASE LIST TYPE OF INSPECTION NEEDED

☐ GREASE TRAPS ☐ PRE CONSTRUCTION MEETING ☐ BALL OR CLEANING ☐ COMPACTION TEST RESULTS

☐ CONCRETE COLLARS ☐ LATERAL MAP ☐ PIPE ☐ MANHOLE

☐ AIR TEST ☐ 'S' ON CURBS ☐ MANDREL ☐ AS BUILT PLANS

MONDAY	TUESDAY	WEDNESDAY	THURSDAY	FRIDAY
☐ AM	☐ AM	☐ AM	☐ AM	☐ AM
☐ PM	☐ PM	☐ PM	☐ PM	☐ PM
☐ NO ACTIVITY	☐ NO ACTIVITY	☐ NO ACTIVITY	☐ NO ACTIVITY	☐ NO ACTIVITY

INSPECTOR_____

REMARKS_____

SIGNATURE OF CONTRACTOR OR RESPONSIBLE EMPLOYEE_____

☐ APPROVED ☐ NOT APPROVED ☐ CORRECT/PROCEED ☐ RE-INSPECT ☐ NOT READY

APPENDIX C

Ash Creek General Sewer Notes

Ash Creek SSD General Sewer Notes:

1. Sewer is to meet the current Ash Creek Special Service District (District) Construction Standard.
2. Prior to completion of the project provide a copy of the geotechnical report and the compaction test results to the District.
3. Prior to completion of the project prove a PDF and a 2’x3’ plan sheet Drawing of Record to the District. The Drawing of Record should include a distance from the near side property line to the sewer lateral marker, also include any changes to sewer main line slopes and depths.
4. The contractor will be responsible to clean and test the sewer lines after all utilities have been installed but prior to asphalt placement. The following tests will need to be completed by the contractor; mandrel test, air test and closed-circuit camera inspection. Camera inspection if provided by the District can be scheduled with the District representative. Tuesdays or Thursdays are generally when the District can perform this camera work.
5. During construction, all sewer lines will need to be capped or sealed to protect the sewer system from flooding or rain events.

APPENDIX D

Standard Detail Drawings

1. Sewer Manhole
2. Ring & Lid/Frame & Lid/Manhole Adjustment to Grade
3. Cast-In-Place Manhole Base
4. Shallow Manhole
5. Sewer Service Connection
6. Sewer Cleanout W/Lid
7. Grease and Sand Interceptor
8. Air Vac
9. Pressure Line Connection to Manhole
10. Typical Trench
11. RV Dump Sation/RV Sewer Dump Station Section

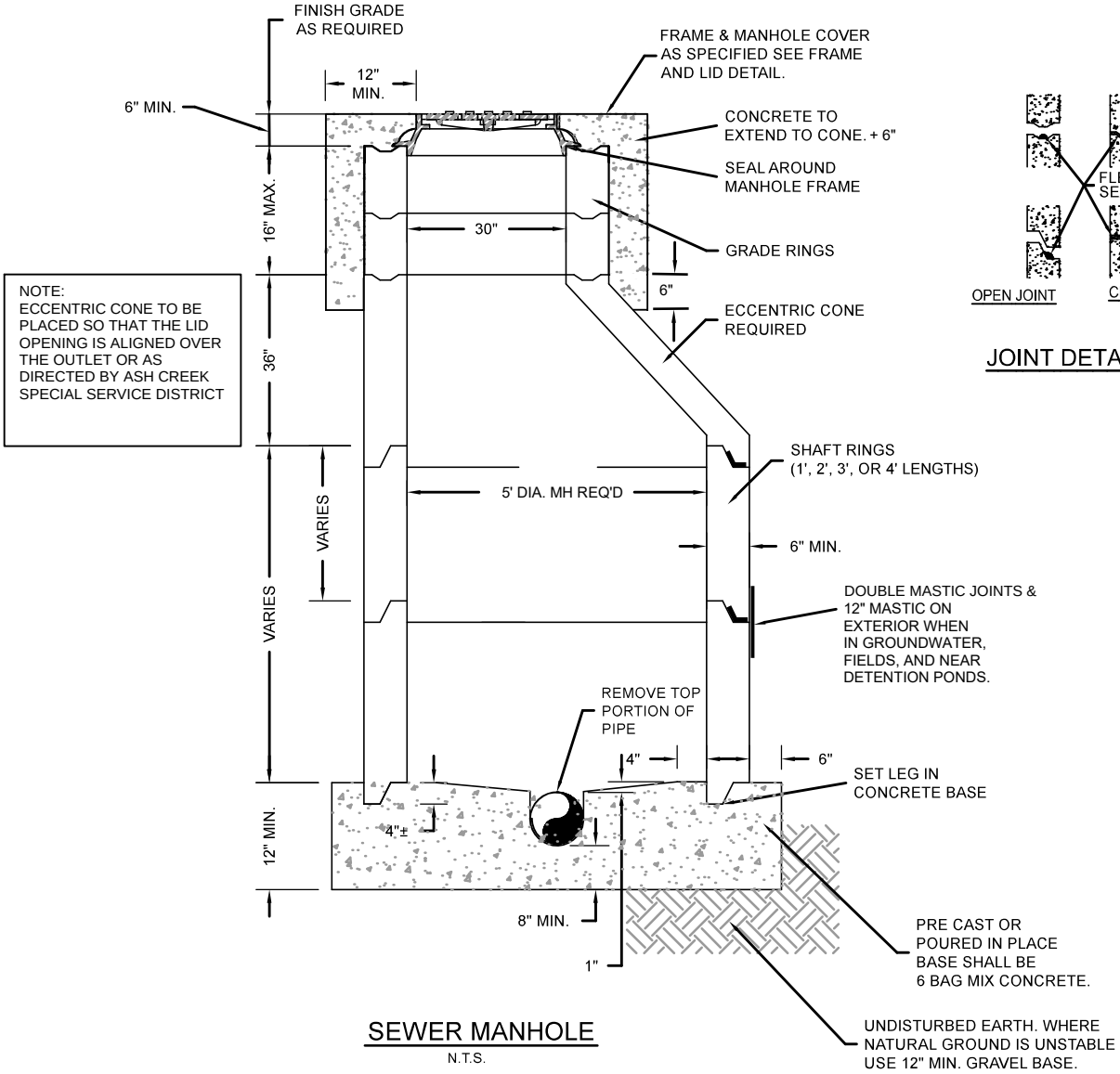

SEWER MANHOLE

N.T.S.

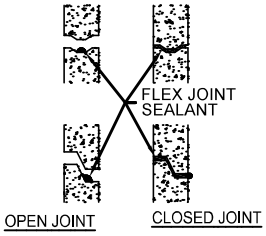

JOINT DETAILS

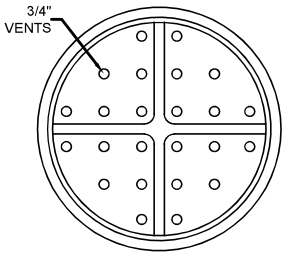

BOTTOM VIEW OF COVER

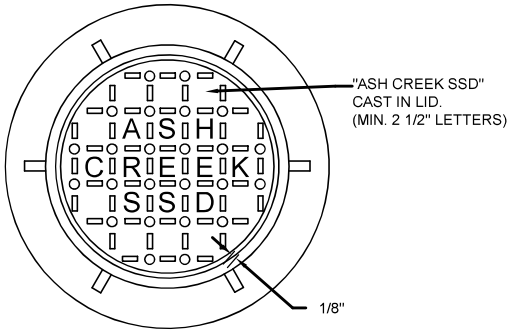

PLAN OF COVER & FRAME

NOTE:
CAST IRON FRAME & COVER TO MEET REQUIREMENTS OF ASTM A 48 (CLASS 30)
REQUIRED MINIMUM COMBINED WEIGHT 402 lbs.

RING & LID DETAIL

N.T.S.

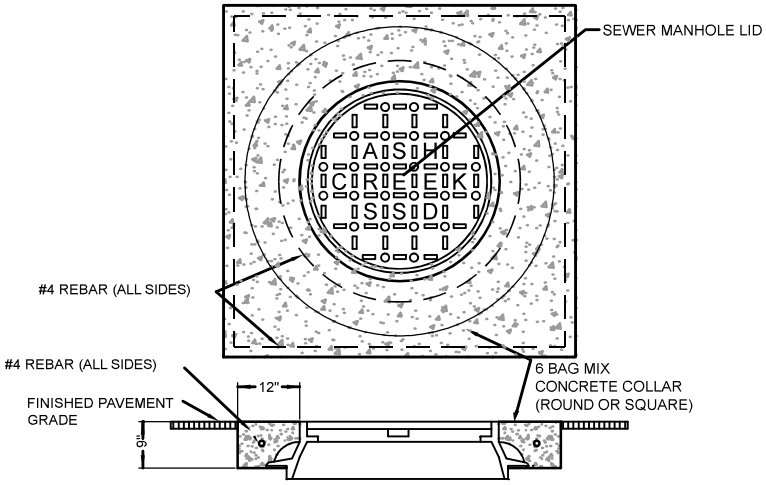

FRAME & LID DETAIL

N.T.S.

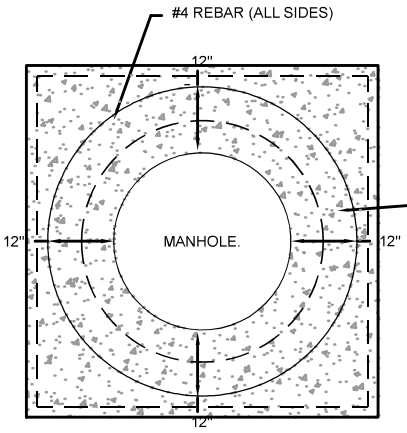

PLAN

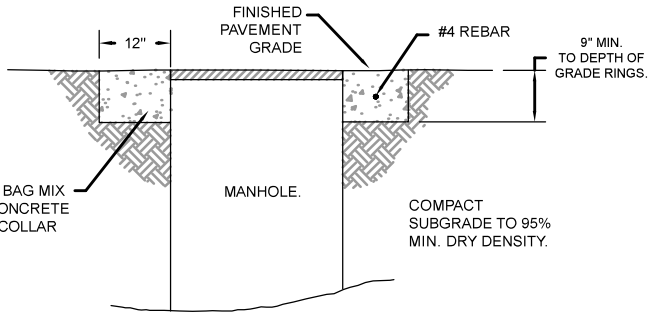

MANHOLES BEHIND TOP BACK OF CURB AND SIDEWALKS SHALL BE SET LEVEL WITH FINAL GRADE WITHOUT CONCRETE.

SECTION

NOTES

1. ADJUST MANHOLES TO GRADE AFTER PAVING IS COMPLETED.
2. CUT OUT TOP AND SET COVER TO GRADE & BACKFILL w/CONCRETE. ASPHALT SHALL BE SAW CUT IN STRAIGHT UNIFORM LINES.

MANHOLE~ADJUSTMENT TO GRADE

N.T.S.

ASH CREEK SPECIAL SERVICE DISTRICT

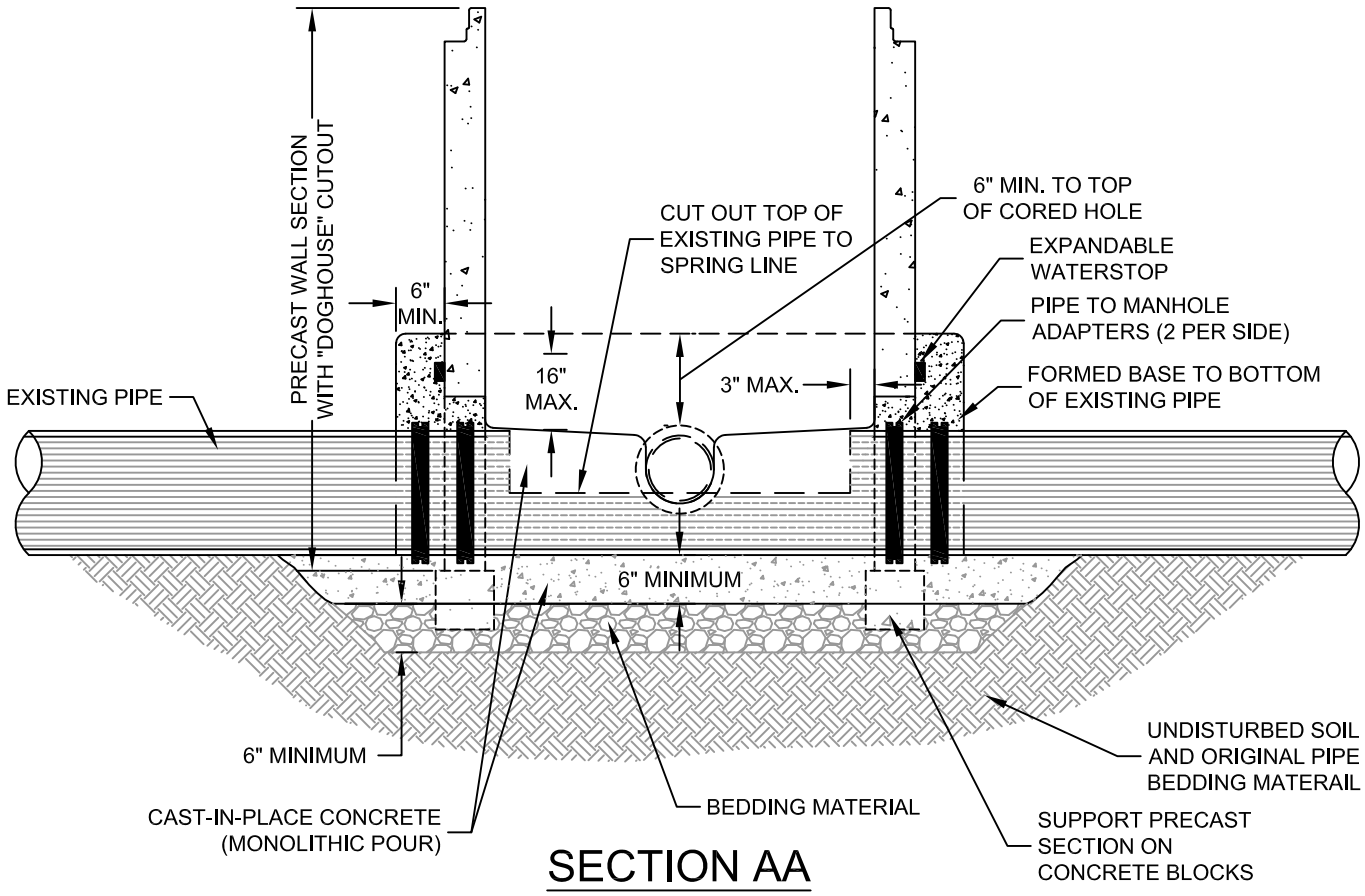

SECTION AA

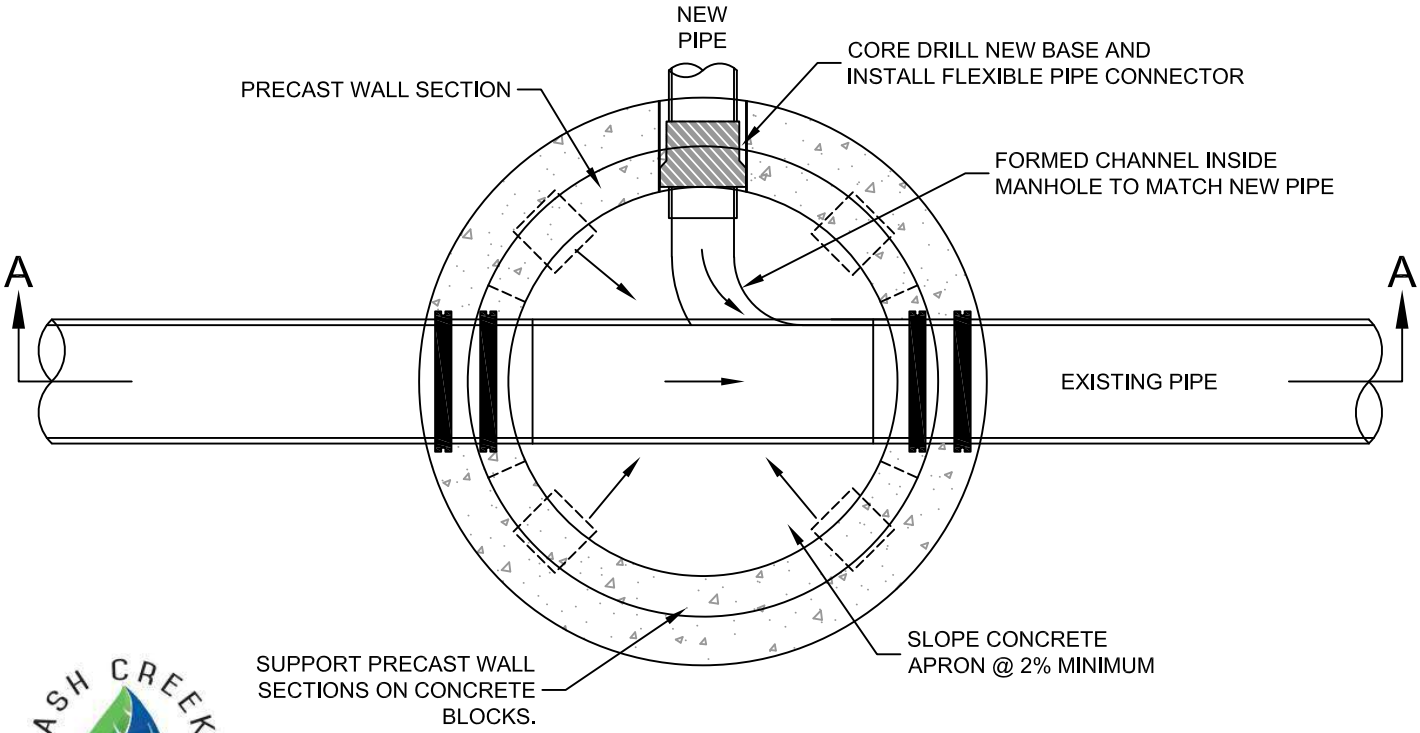

CAST-IN-PLACE MANHOLE BASE

ASH CREEK SPECIAL SERVICE DISTRICT

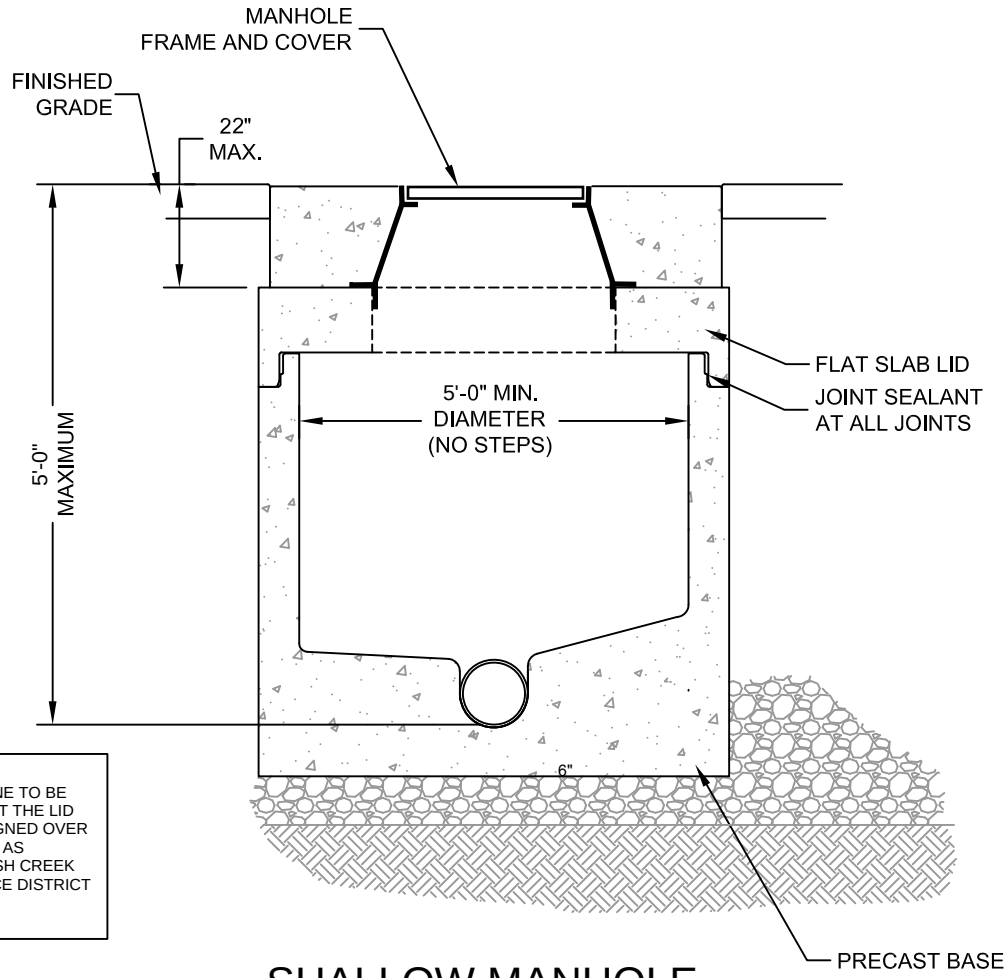

NOTE:
ECCENTRIC CONE TO BE PLACED SO THAT THE LID OPENING IS ALIGNED OVER THE OUTLET OR AS DIRECTED BY ASH CREEK SPECIAL SERVICE DISTRICT

SHALLOW MANHOLE

ASH CREEK SPECIAL SERVICE DISTRICT

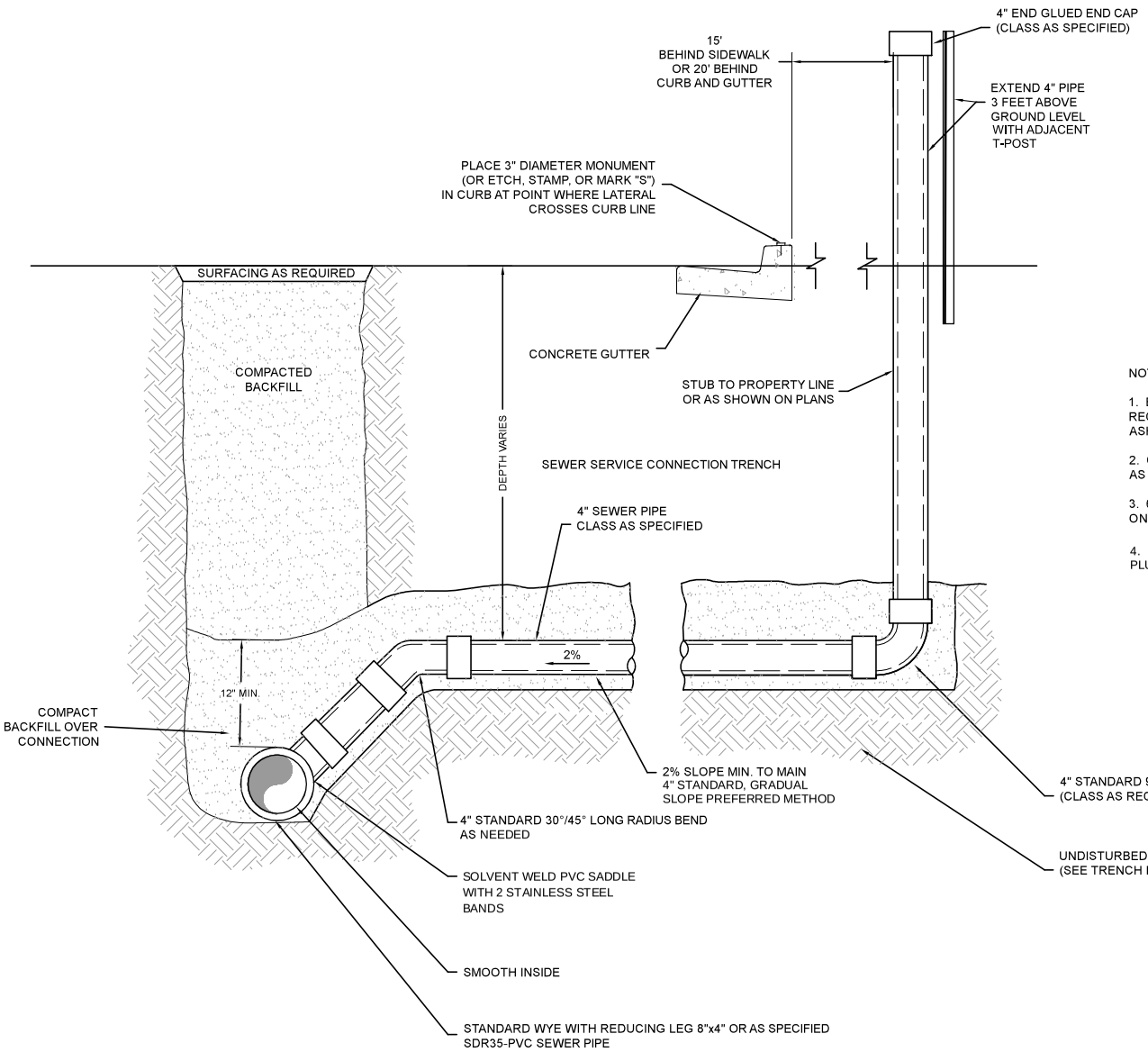

NOTE

1. BACKFILL AND COMPACTION REQUIREMENTS SHALL COMPLY WITH ASH CREEK SSD STANDARDS.

2. CLEANOUT DIAMETER TO BE SAME AS LATERAL.

3. 6" LATERALS TO CONNECT AT MANHOLE ONLY.

4. RISER SHALL BE INSTALLED VERTICALLY PLUMB.

SEWER SERVICE CONNECTION DETAIL

N.T.S.

ASH CREEK SPECIAL SERVICE DISTRICT

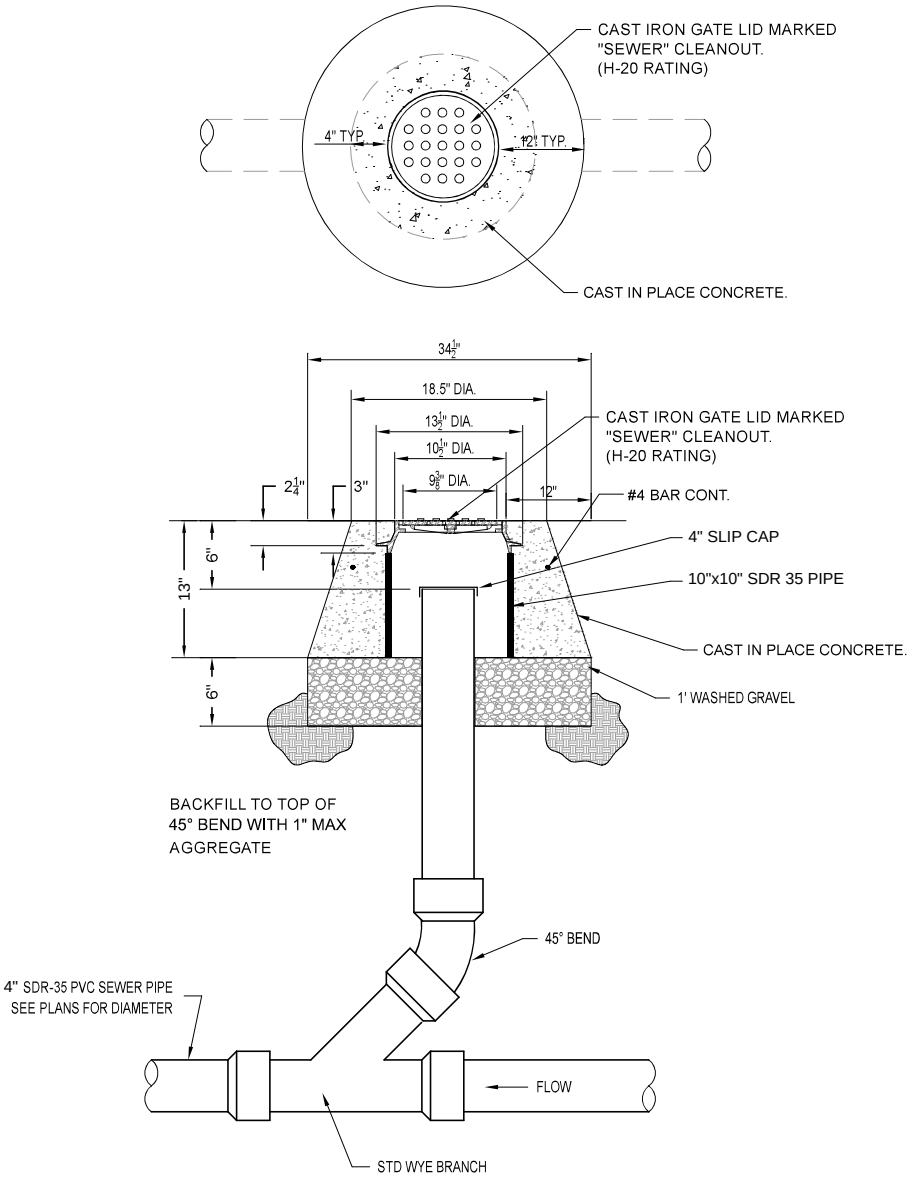

SEWER CLEANOUT W/LID DETAIL

N.T.S.

ASH CREEK SPECIAL SERVICE DISTRICT

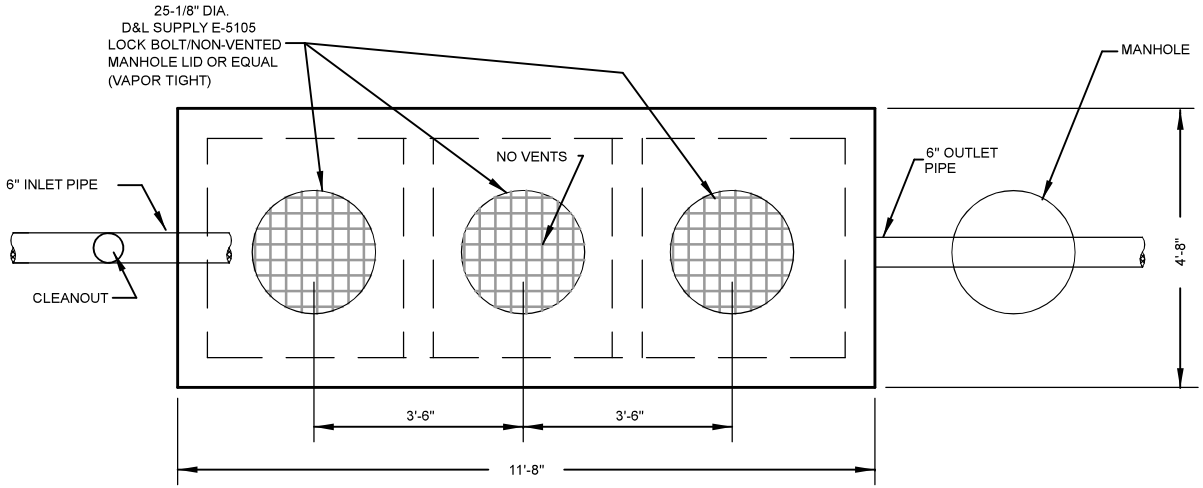

TOP VIEW

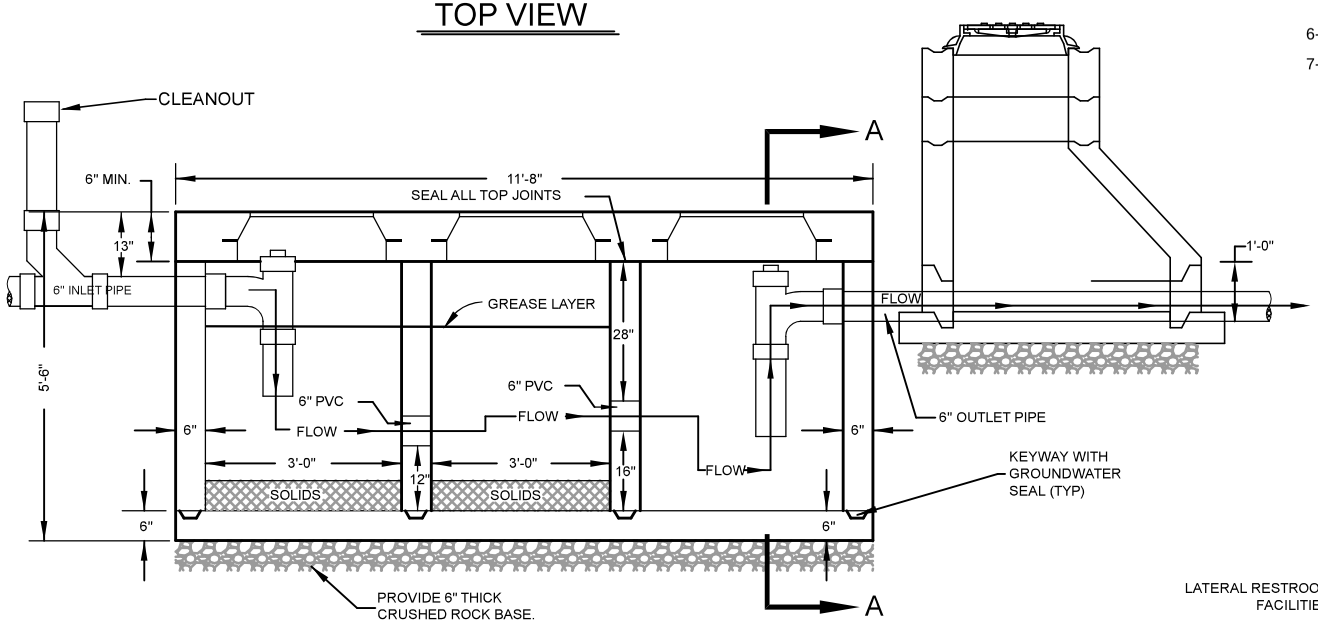

FRONT X-SECTION VIEW

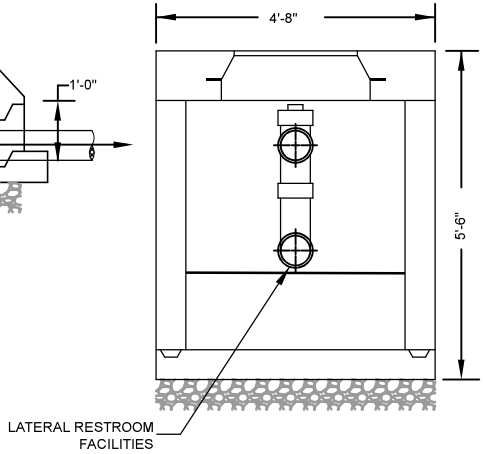

SIDE X-SECTION A-A

NOTES:

1- MATERIAL SPEC'S:
A. CONCRETE PORTLAND CEMENT TYPE II. MINIMUM COMPRESSIVE STRENGTH=4000 PSI AT 28 DAYS.
B. REINFORCING BAR INTERMEDIATE GRADE ASTM A615.
C. REINFORCING WELDED WIRE MESH ASTM A185

2- ALL DIMENSIONS +/- NOT TO BE USED FOR CONSTRUCTION PURPOSES UNLESS CERTIFIED.

3- PRECAST UNIT TO BE PLACED ON NATURAL SOIL OR APPROVED COMPACTED FILL.

4- STANDARD GROUND WATER SEAL- BUTYL ROPE MASTIC OR CEMENT MORTAR.

5- PRIOR TO BACKFILLING, INTERCEPTOR SHALL BE TESTED. TANK SHALL BE EXPOSED ON ALL SIDES AND FILLED WITH WATER AND SHALL HOLD WATER FOR A MINIMUM TEST PERIOD OF TWO HOURS.

6- CLEANOUT SIZE TO MATCH INLET/OUTLET SIZE.

7- NOT TO EXCEED 5' COVER OVER SAND TRAP /INTERCEPTOR

ASH CREEK SPECIAL SERVICE DISTRICT

GREASE AND SAND INTERCEPTOR DETAIL

N.T.S.

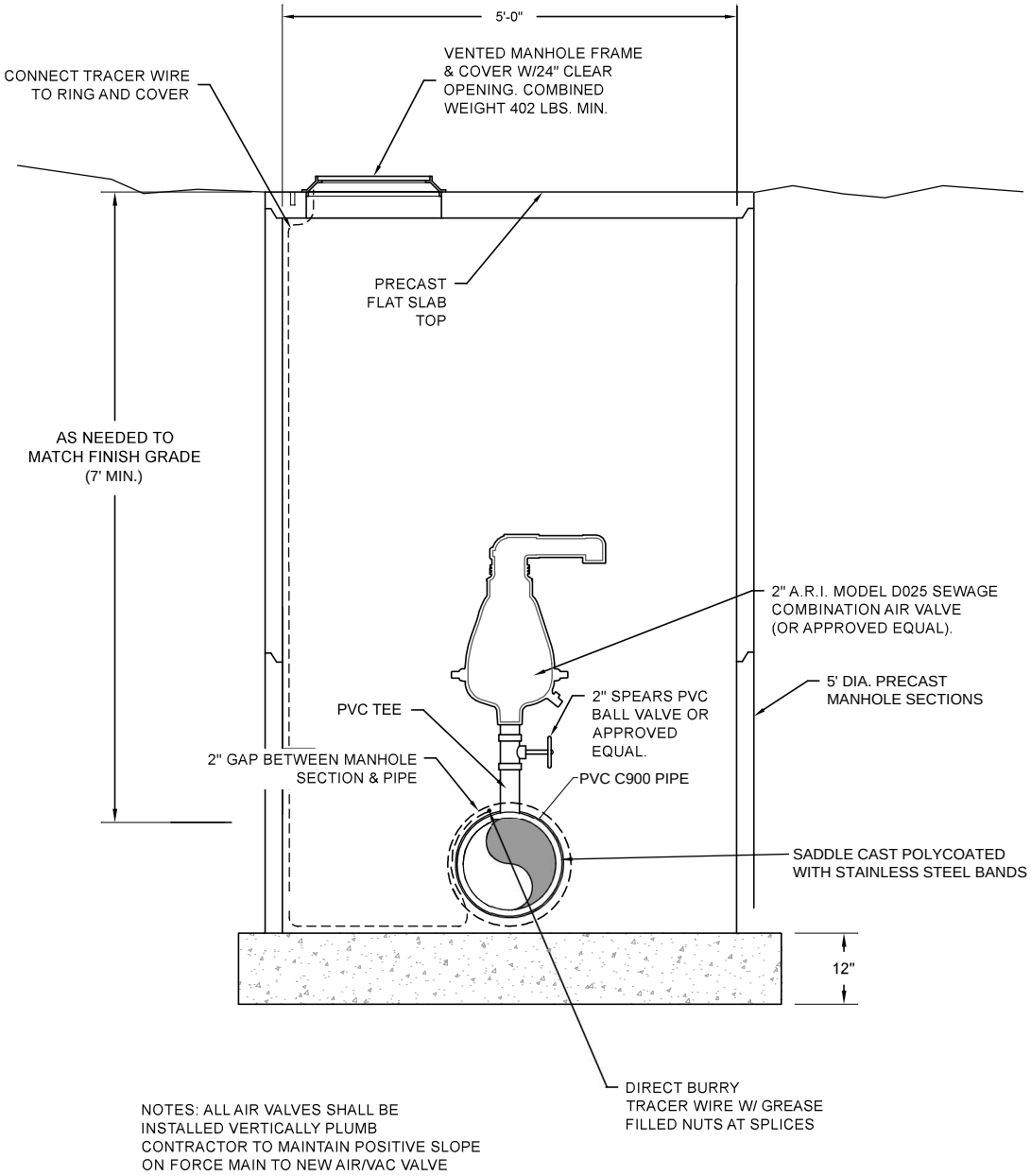

NOTES: ALL AIR VALVES SHALL BE INSTALLED VERTICALLY PLUMB
CONTRACTOR TO MAINTAIN POSITIVE SLOPE ON FORCE MAIN TO NEW AIR/VAC VALVE

AIR VAC VALVE

N.T.S.

ASH CREEK SPECIAL SERVICE DISTRICT

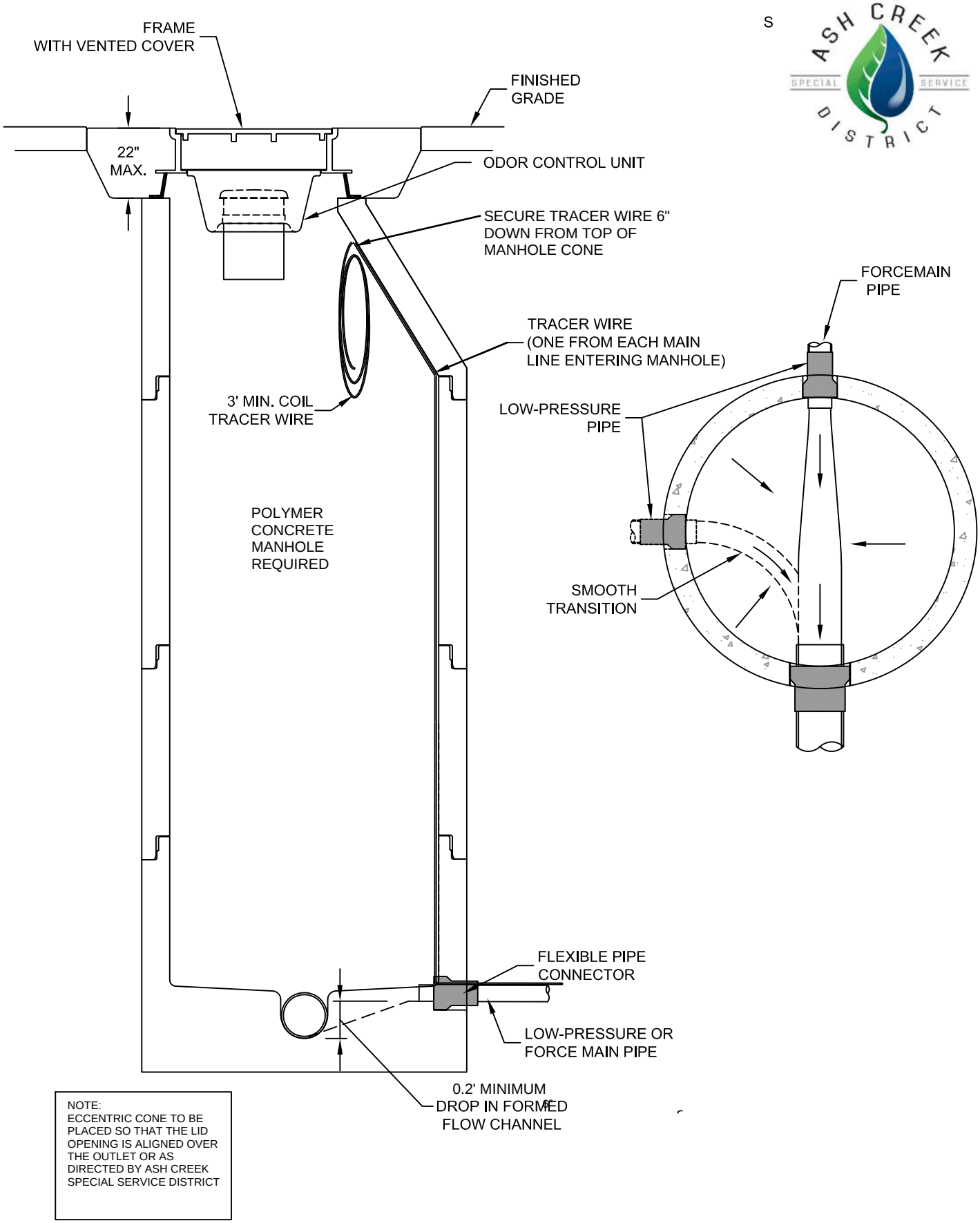

NOTE:
ECCENTRIC CONE TO BE PLACED SO THAT THE LID OPENING IS ALIGNED OVER THE OUTLET OR AS DIRECTED BY ASH CREEK SPECIAL SERVICE DISTRICT

PRESSURE LINE CONNECTION TO MANHOLE

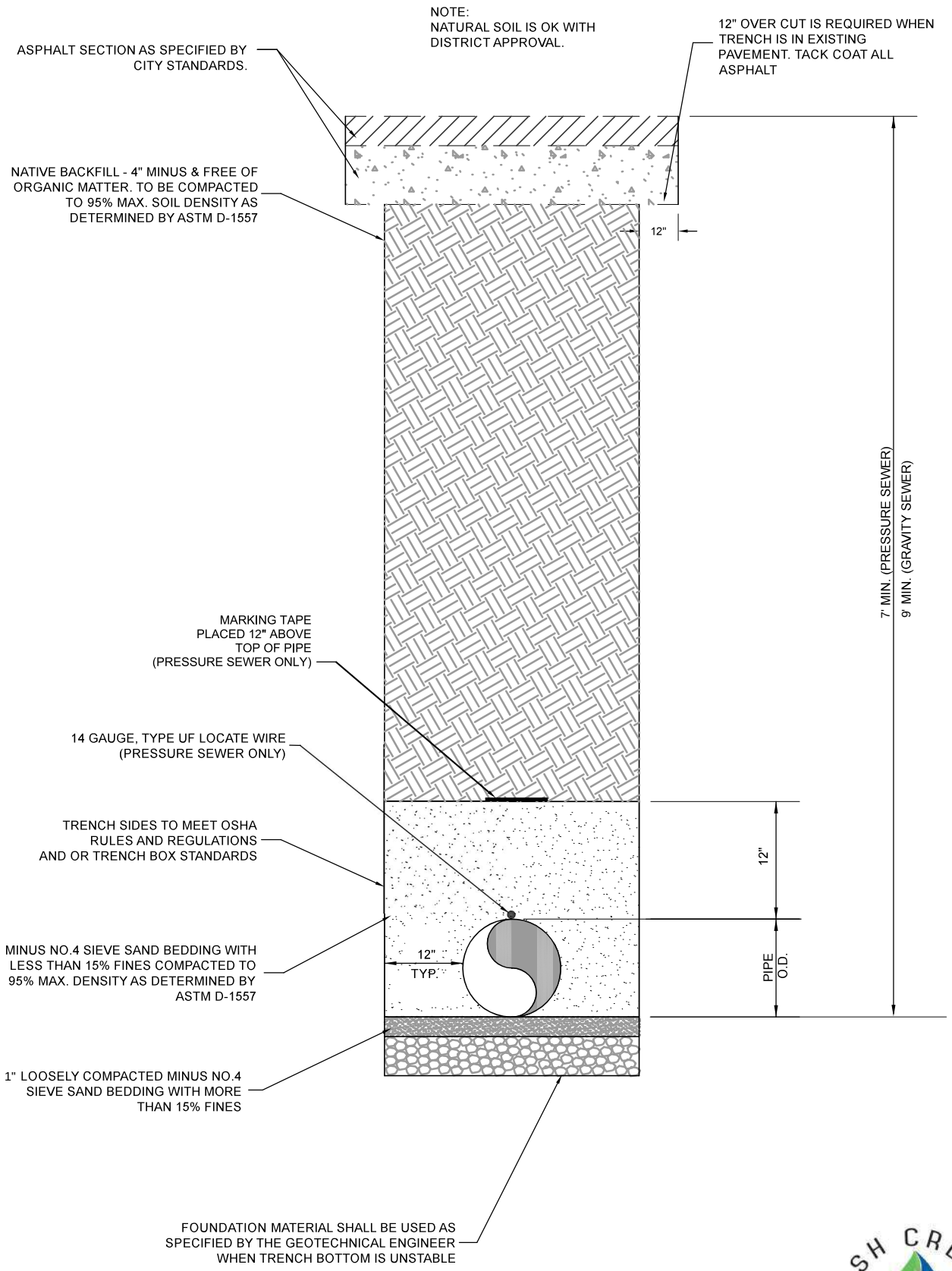

TYPICAL TRENCH DETAIL

N.T.S.

ASH CREEK SPECIAL SERVICE DISTRICT

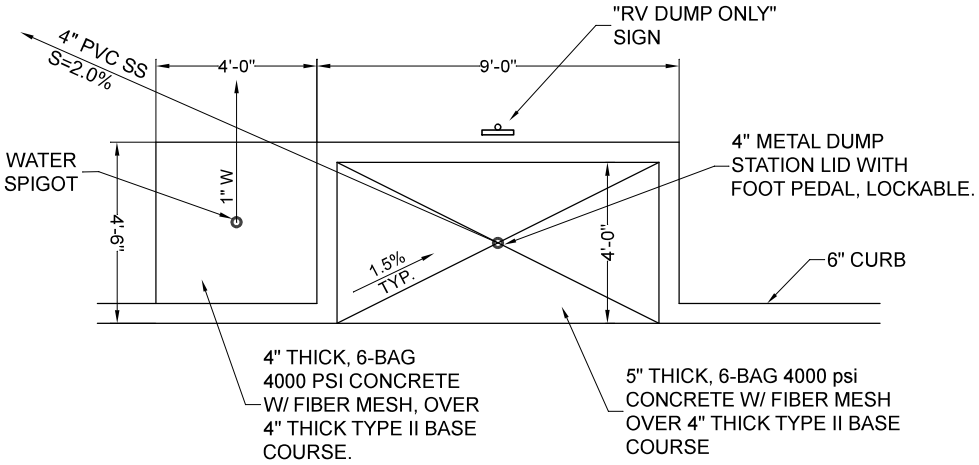

RV SEWER DUMP STATION

N.T.S.

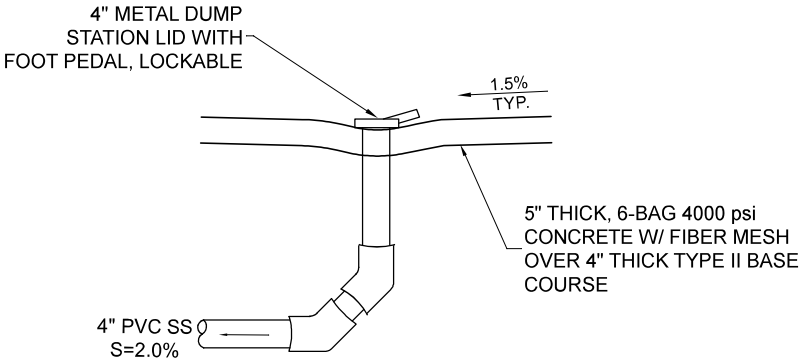

RV SEWER DUMP STATION SECTION

N.T.S.

Ash Creek Special Service District
1350 South Sand Hollow Road
Hurricane, Utah 84737
(435) 635-2348

HURRICANE CITY
UTAH

STAFF COMMENTS

Discussion and possible approval of a **Boot Stompin Square Dance fundraiser for the Veterans Park**- Patti Nation

Discussion:

Findings:

Recommendation:

Attachments:
None

HURRICANE CITY
UTAH

STAFF COMMENTS

Consideration and possible approval of the **contract for the City Prosecutor.** -Kaden DeMille

Discussion:
As directed by the Council in last year's budget meetings, Hurricane City posted a Request for Proposals for the City Prosecutor on January 5, 2024, with a submission deadline of January 22, 2024. Only one proposal was received, which was from Cowdell Law. With only one proposal, the submission deadline was extended to February 9, 2024. After the deadline extension, Cowdell Law remained the only applicant. Due to some personnel matters that required an interim prosecutor for the City Court to continue to function, Cowdell Law agreed to a 90-day temporary contract that started on February 1, 2024. Cowdell Law provides prosecuting services in several other Utah Justice Courts, and the references from those jurisdictions have been very positive. Having an interim/temporary prosecutor has been problematic because of the Bureau of Criminal Investigation compliance requirements that govern access to the protected records necessary for prosecution, so staff recommend that the Council appoint a permanent prosecutor. The proposal by Cowdell Law is to provide full-service prosecuting services, including all support staff, for a flat fee of $8,500 per month. The contract is for two years, but the City may terminate the contract at any time with proper notice. Staff recommend that the Council approve and accept the proposal by Cowdell Law. -Dayton Hall

Findings:

Recommendation:

Attachments:
1. Cowdell Law-Hurricane Prosecutor Proposal
2. Cowdell Law-Hurricane Prosecutor Retainer Letter and Insurance (Confidential)

COWDELL LAW

Tracy S. Cowdell

Sasha Brown
Michael K. Green
Brooke Larsen

Sharik L. Peck II
Stephanie A. Shelman
Daniel Van Beuge

32 E. Main Street | Sandy, Utah 84070 | Phone 801.947.0079 | Fax 800.388.7054

January 22, 2024

Attn: Kaden DeMille, City Manager
Hurricane City
Legal Services RFP
147 North 870 West
Hurricane, Utah 84737

RE: REQUEST FOR PROPOSAL, Hurricane City Justice Court Prosecuting Attorney

Dear Mr. DeMille and members of the selection committee,

Thank you for taking the time to review this packet, which constitutes our statement of qualifications and proposal. We are very interested in providing prosecution services to the City of Hurricane, and we are confident that we meet all of the requirements outlined in the RFP.

We are a private Utah law firm that specializes in prosecution, as well as working with municipalities and local government. We currently are appointed as the civil City Attorney for the cities of Providence and Taylorsville. We provide prosecution services for the cities of Taylorsville, Draper and Moab, as well as several other cities and counties in Utah on a contracted, case-by-case basis. We also are the appointed Conflict Counsel for the Salt Lake District Attorney's Office.

As such, we are highly familiar with criminal law in the State of Utah and the operations and systems of its Justice Courts. Our firm of seven attorneys and 10 support staff members has extensive experience relating to municipal prosecution, including screenings and representation of all cases charged through the justice courts; appeals from the justice courts to district courts; covering all court dockets and trials; coordination with court clerks, police officials, probation officers, defense attorneys, victims and witnesses; knowledge and understanding of pertinent case law and statutes; as well as process service, court filing and scheduling. Our attorneys are highly competent in all areas of municipal prosecution and prosecute approximately 5,000 cases in the justice courts per month (over 60,000 cases annually).

Setting us apart from other firms, we also have developed a proprietary digital Case Management System that interfaces with the Utah Courts, and which our firm's prosecutors use every day to organize thousands of case files, manage court calendars and track civil tasks and projects. We utilize and provide this service at no cost to our clients.

We look forward to talking to you more about what we can do to help Hurricane City. My résumé is attached, as requested, as well as that of three of our firm's attorneys who also could act as primary attorney on this account, depending on the city's decision. Thank you again.

Sincerely,

Michael K. Green, Esq.

COWDELL LAW

EXECUTIVE SUMMARY

With this Statement of Interest, we outline our relevant experience particular to prosecution and how we are uniquely qualified to serve as the Hurricane City Prosecutor. We are available to provide ongoing prosecuting attorney services and represent Hurricane in all cases charged through the Justice Court. Our firm's specialty is municipal representation and prosecution. In all, our firm has seven experienced attorneys, led by Tracy Scott Cowdell as managing partner. We also employ 10 support staff members, and all of our staff are permanent employees.

As a firm, we have been representing municipalities in the justice courts for the past two decades. All of our attorneys have specialized experience in prosecution and are members in good standing with the Utah State Bar Association. Our attorneys are also licensed and admitted to practice in Utah State and federal courts. Our firm has attorneys with more than 15 years of Utah prosecution experience. Collectively, we have almost 75 years of experience practicing law in the public sector. As such, we are intricately familiar with the legal and ethical duties and responsibilities of a public prosecutor, including court rules and professional standards.

Our firm prosecutes approximately 5,000 cases in the justice courts per month (over 60,000 cases annually). We are experienced in small justice courts, like the courts of Ephraim and Moab, and have the resources and experience to serve as the prosecutors for larger courts, like our clients Taylorsville City and Draper. At the same time, we recognize that each of our governmental clients have unique needs and wishes. Therefore, we keep a very flexible mindset when interacting with each client. Before deciding on each provision, we suggest a meeting between the relevant parties to discuss any outstanding issues or questions. We at Cowdell Law are able to meet all of Hurricane City's requirements and will do so with a high level of quality. Our trademark is customer service; we make sure our customers are satisfied.

We are prepared to review all cases for filing and make subsequent charging decisions, subpoena preparation and trial preparation. We will conduct all court appearances, including arraignments, motions, bench and jury trials, plea negotiations, forfeiture hearings and any appeals.

COWDELL LAW

PROPOSAL

1. **Interest and Résumés.** Please find attached the résumés of Michael Green, who is the primary contact for this proposal. Also, attached are the résumés of attorneys Sharik Peck and Daniel Van Beuge, as well as firm Partner Tracy Cowdell. All have substantial prosecution experience and could step right in as prosecutors for Hurricane City. Because Michael is a more seasoned attorney, their hourly rates do vary as detailed in the Compensation Section of this proposal where we have outlined some options for the city to consider. The lead attorney outlined in this proposal would depend on which direction the city would like to go. We are open to all options and want to carry through on a direction that best works for Hurricane City and its citizens.

2. **Background of Firm.** Cowdell Law was organized in 2006. Our civil city clients include Taylorsville City, Providence City and Ephraim City. We also have assisted several Utah municipalities on an as needed basis, and we provide prosecution services to Taylorsville, Draper, Moab and Ephraim City. In all, the prosecution arm of our firm prosecutes approximately 5,000 cases in the justice courts per month. Additionally, we are the appointed Conflict Counsel for the Salt Lake District Attorney's Office. Our work as General Counsel for clients Sandy Suburban Improvement District and the South Valley Water Reclamation Facility has given us additional experience in government practice. In all, our firm has seven experienced attorneys. As a firm, we have been representing municipalities in providing prosecution services for almost two decades. We can draft and evaluate city ordinances, as well; it is something we do on a weekly basis for nearly all of our municipalities.

3. **Firm Information/Experience.** You would be hard pressed to find a firm in Utah as capable or experienced as ours when it comes to municipal prosecution. With seven attorneys, we have the necessary skill and experience to draw upon in finding solutions to any problem. All of our attorneys are members of the Utah State Bar in good standing and are licensed to practice in state and federal courts. We regularly attend trainings and conferences specific to governmental attorneys and staff, in association with the Utah City and District Attorneys Association (UCDAA), the Utah Association of Counties (UAC), the Utah Prosecution Council (UPC), and the Utah Prosecutorial Assistants Association (UPAA), among others. Our attorneys are also diverse and speak several world languages, including Spanish.

   We have the ability to assign the right attorneys to the right projects, taking advantage of individual expertise. While we will assign a prosecutor specific to Hurricane and its caseload, all of our attorneys will be available to help on complicated projects or with specialized questions. The firm also benefits significantly in the area of prosecution from the strong mentorship of Partner Tracy Scott Cowdell, who has more than 20 years of knowledge and experience with Utah municipal law, other public sector experience and prosecution.

Additionally, on the prosecution side, we are able to easily track all court proceedings, insuring prompt and regular attendance. With our digital Case Management System, our firm's prosecutors are able to organize thousands of case files, manage court calendars and track civil tasks and projects. Our attorneys use this system every day to easily track all court proceedings. Unique to our firm, the system has streamlined workloads, allowing for greater organization and efficiency.

As seasoned prosecutors, we know the justice court system and how to navigate it to get results. We have a reputation of working well with all stakeholders, including court staff, public defenders, police officers and personnel, witnesses and victims, as well as both city and county officials including the County Attorney's Office. Our work as appointed Conflict Counsel for the Salt Lake District Attorney's Office has enabled us to successfully prosecute cases on various levels. We take a proactive approach to investigation of complex cases and problems within the city.

We are highly skilled in all areas of criminal prosecution. Areas of particular expertise include but are not limited to:

- Court Filings
- Summons & Subpoenas
- Discovery & Screenings
- Written Complaints
- Paralegal Services
- Subpoenas/Court Orders
- Criminal Prosecution
- Legal Guidance
- ALJ Experience
- Police Department Relationships
- Communication & Connection
- Enforcement of City Code & Zoning
- Victim Advocate Relationships
- Reports & Dispositions
- Case Organization
- Trial Experience
- Arraignments and Pre-trial Hearings
- Legal Research
- Drafting of Motions, Notices and Orders
- Training of Police Officers and Staff
- Communication with all Stakeholders

4. **Municipal Clients.** Following is a list of municipal and city clients we have represented over the past five years, including as municipal prosecutors:

Taylorsville City — 2008 to present. We provide both civil City Attorney and prosecution services to the city. As prosecutors, the firm prosecutes traffic and misdemeanor cases in the Justice Court. Firm Partner Tracy Cowdell is the part-time Taylorsville City Attorney.

Ephraim City — 2001 to present. The firm provides prosecution services and has in the past also provided City Attorney services.

Draper City — 2013 to present. The firm provides prosecution services.

Moab City — 2014 to present. The firm provides prosecution services and assists on an hourly basis on the civil side.

Salt Lake County District Attorney's Office — 2016 to present. The firm is the appointed Conflict Counsel to the DA's office. As such, it prosecutes various cases that pose a conflict to Salt Lake County prosecutors.

Herriman City — 2018 to October 2022. The firm provided prosecution services and assisted on the civil side.

Providence City — 2018 to present. The firm provides civil City Attorney services.

Sandy City Council — 2017 to present. Firm Partner Tracy Cowdell is the appointed General Counsel to the Sandy City Council.

South Valley Water Reclamation Facility — 2009 to present. Firm Partner Tracy Cowdell is the appointed General Counsel.

Sandy Suburban Improvement District — 2003 to present. Firm Partner Tracy Cowdell is the appointed General Counsel.

In addition, Firm Partner Tracy Cowdell serves as an appointed hearing officer/administrative law judge for:

- Draper City
- Utah Professional Practices Advisory Commission (UPPAC), which advises the Utah State Board of Education
- Utah State Department of Environmental Quality
- Utah Scenic Byways Committee
- Utah Bureau of Emergency Medical Services and Preparedness
- Washington County School District
- Salt Lake City School District

5. **Lead Attorney.** We anticipate assigning either Michael Green and/or Daniel Van Beuge. Both have substantial prosecution experience and could step right in as prosecutors for Hurricane City. Because Michael is a more seasoned attorney, their hourly rates do vary as detailed in the Compensation Section of this proposal where we have outlined a few options.

6. **Availability.** We are available to meet and cover all court assignments as scheduled, including Justice Court, bench trials and jury trials. We are reliable and accountable. We routinely cover various Municipal Justice Courts in the State of Utah, so we know what needs to be done.

   In addition, because of our unique focus on the latest technologies, we are only minutes away. We can be called upon whenever an issue comes up. We are available and willing to meet in person anytime the need arises. Because our lawyers primarily work for political subdivisions of the State of Utah, we understand that we are "on call" 24 hours a day. We are always available by email, cell phone or text and can meet in person anytime the need arises.

   Besides knowing the process, we also have the manpower, with a full firm of seven attorneys and 10 support staff members including paralegals. As such, we have no problem guaranteeing that any court proceedings are covered.

7. **Insurance Policy.** A certificate of insurance, including general liability, automobile, workers' compensation and errors and omissions insurance carried by the firm, is attached. Our firm currently carries $2 million in professional liability insurance.

8. **Disciplinary Actions.** This firm or any of the attorneys employed by the firm have not been sued by cities or other clients for malpractice, nor have any been the subject of complaints filed by the State Bar.

9. **Conflicts of Interest.** By executing this document, we certify that we have no known conflicts of interest. We are a smaller firm, and it is easy to determine potential conflicts. Generally speaking, if a conflict arises, it is readily apparent. However, during our weekly staff meetings, all attorneys and staff discuss pending issues. Any conflicts that have not otherwise been found are discussed and remedied during the meeting. We have relationships with many municipal attorneys that are available should any conflict arise during our performance of services.

10. **Hurricane City Office Hours.** The firm can have a prosecutor available 24 hours a day for calls and video/Zoom/Webex meetings and can have someone on premises as much as needed as scheduled. The firm plans on having someone available Tuesday and Wednesdays.

11. **References.** The following three contacts can attest to the relevant quality of work that we have completed as it relates to our municipal and governmental clients. We are also happy to provide a broader reference list if desired.

    - **John Taylor.** Taylorsville City Administrator. Phone: 801-963-5400.
      Email: jtaylor@taylorsvilleut.gov.

    - **Troy Walker.** Draper City Mayor. Phone: 801-576-6513.
      Email: troy.walker@draper.ut.us

- **Jerry L. Knight**. Sandy Suburban Improvement District General Manager. Phone: 801-561-7662. Email: jknight@sandysid.com

12. **Building Relationships/Start-up.** One of the best parts of our job is the relationships we have formed with the people we work with. We enjoy close working relationships with the police chiefs, court staff and city staff in all of the municipalities we serve. In fact, we count many of those staff members, law enforcement officers and stakeholders among our best friends. We know how important teamwork is, and indeed we are all on the same team. By working together, we are able to do infinitely more than we could ever do on our own, which is especially important when it comes to the criminal justice system. Fostering synergy and collaboration is of utmost importance to us, as we are continually striving to do more. We know that by working together, we can accomplish all that needs to be done. We believe in extending common courtesies, giving others the benefit of the doubt and encouraging each other in what can sometimes be a difficult job. We also know that communication is the key, and we work diligently to ensure we are communicating at every level. We have a fabulous staff of paralegals and support professionals who hold these same goals and help us operate at the highest levels in meeting all objectives.

    As we began work with Hurricane City, we would first want to meet with key stakeholders, including the City Manager, Police Chief, Victims Advocate and other city leaders as identified, as well as the Justice Court's judge as appropriate, to define and ensure that we are meeting expectations. We would want to talk with the Police Chief or law enforcement officials about any pending screens, and would want to begin processing those as soon as possible. We would also introduce ourselves to the Public Defender and discuss any of their needs or concerns. In addition, we would want to add the Hurricane Justice Court calendar and files to our own Case Management System so that we are immediately ready to start handling cases. Our staff are already BCI certified, so we are ready to hit the ground running.

13. **Proposed Compensation.** We anticipate dedicating one of our attorneys and their primary assignment to Hurricane City and the Hurricane Justice Court. We have no problem covering the approximate time necessary for this assignment. Below are a few options. We can also provide additional attorney support on a project basis at $150.00 per hour.

    Option 1:
    Flat Rate for all services: **$8,500 per month.**

    a. This includes all justice court appearances, all de no appeals at the justice court, on-call calls with officers and city employees and routine travel for regularly scheduled matters.

c. Travel: For non-routine matters, or excluded matters under the previous paragraph, we will require reimbursement. The firm will require reimbursement for hotels, per diem, and mileage in accordance with the GSA travel guidelines for the Washington County area.

d. No additional charge for telephone/IT, printing, photocopying, etc.

e. This does not include filing fees, expert witnesses, witness fees, or court reporter fees, or process server fees outside of the use of local law enforcement.

Option 2:
Hourly Rate for attorney partners: **$250 per hour.**
Hourly Rate for attorney associates: **$150 per hour.**
Hourly Rate for support staff: **$110 per hour.**

a. This option is billed at 1/10 of an hour increment, this includes phone calls, correspondence, and personal conferences.

b. Travel: The firm will require reimbursement for hotels, per diem, and mileage in accordance with the GSA travel guidelines for the Washington County area.

c. No additional charge for telephone/IT, printing, photocopying, etc.

d. This does not include filing fees, expert witnesses, witness fees, or court reporter fees, or process server fees outside of the use of local law enforcement.

14. The firm agrees to the City Council's right to terminate the agreement, at its sole discretion, upon the provision of notice.

15. The Firm can provide the services for two years in length with an option to extend on terms approved by the City Council.

16. The firm has included a copy of its engagement letter.

Michael Kelvin Green

1245 Delacroix Drive ▪ Draper, UT 84020 ▪ (801) 865-8183 ▪ mike.k.green@gmail.com

PROFESSIONAL EXPERIENCE

Cowdell & Woolley P.C., *Attorney (*August 2018 to Present)

State of Utah, *Assistant Attorney General,* (2011 through August 2018)

Transactional Experience:

- Prepared and draft an array of complex low-income housing loans, deeds of trust, deed restriction, leases and documents
- State real property leasing and acquisitions, to include utility work
- Prepared all legal documents for the new Rodeo Arena on the Fair Park.
- Negotiated and advised on procuring of over 300 technology related contracts for DTS.
- Drafted and reviewed side-letters for multiple investment vehicles to include private equity, separate managed accounts, and custody agreements

Litigation Experience:

- Litigated 300 Medicaid Fraud, Waste and Abuse cases in administrative and District Courts.
- Non-judicial and judicial foreclosures, quashing subpoenas, administrative law and regulatory actions, public records hearings
- Broad motion and law practice in District Court, including trial and prevailing on three cases in the Utah Court of Appeals.

Utah Army National Guard (Reserve Status)
Staff Sergeant (E-6), Intelligence Non-Commissioned Officer in Charge (2001-Present)

- Served in Afghanistan from 2003-2004 with 1st Battalion 19th Special Forces Group (ABN)
- Military Awards include the Meritorious Service Medal, Army Commendation Medal, Army Achievement Medal, Good Conduct Medal, and Parachutist Badge.
- Top Secret SCI Security Clearance

Draper City (Part-Time)
City Councilmember (Term Jan 2018-22)

- Economic Development Chair, Vice-Chair of the RDA, Emergency Preparedness Committee

EDUCATION

Thomas Jefferson School of Law, San Diego, CA. Juris *Doctor*, 2011
Utah State University, Logan, UT. *Master of Science- Political Science,* 2009
University of Utah, Salt Lake City, UT. *Bachelor of Science- Political Science*, 2006

SKILLS AND INTERESTS

- Intermediate Spanish
- Private Pilot License (107 hours of flight experience)
- Sigma Chi Fraternity Member
- Boy Scouts of America Eagle Scout
- Licensed in the State of Utah, the 10th Circuit Court of Appeals, the Court of Military Appeals, and the Supreme Court of the United States

TRACY SCOTT COWDELL

32 EAST MAIN STREET, SANDY, UTAH 84070 • cell: 801.550.9864 • home: 801.566.4287 • e-mail: tcowdell@me.com

PROFESSIONAL EXPERIENCE:

Partner, *COWDELL AND WOOLLEY, P.C.*, Sandy, Utah (2001-Present)

- Areas of emphasis include: all areas of representation of governmental entities
- Represent public and elected officials in their official capacity
- Administrative Law Judge for Draper City, Utah Division of Environmental Quality, Utah Professional Practices Advisory Commission, Washington County School District, Salt Lake City School District, Utah Scenic Byways Committee
- Daily experience with negotiation, collaboration and problem solving
- Senior advisor to appointed and elected officials
- Practice includes GRAMA, Utah Open Meeting Act, Employee Ethics Act, land use, the state procurement code, prosecution and other governmental related regulation
- Appointments: City Attorney for Taylorsville, Midvale and Draper City
- Other clients include: Sandy Suburban Improvement District, South Valley Water Reclamation Facility and other governmental clients

Chief Operations Officer, *Advanced IT Solutions, Inc.,* Sandy, Utah (1998-2001)

- Co-founder and Principal
- Proficient in MS Office, the Internet, LAN/WAN management and other technology applications
- Liaison between company management and technical support team

EDUCATION AND CREDENTIALS:

Juris Doctorate, (2001) *J. Reuben Clark Law School, Brigham Young University*

- Faculty Award for Meritorious Achievement and Distinguished Service
- Extern in Chief Judge Dee Benson's Office, U.S. District Court
- Trained in mediation, negotiation and meeting facilitation
- Member of the Alternative Dispute Resolution Society

Bachelor of Science, (1997) *summa cum laude*, *University of Utah*

- Political science and sociology (double major) certified in criminology and corrections
- GPA 3.93 (top one percent)
- Sociology Scholar and Scholarship
- Alpha Kappa Delta sociology honors
- Member of Golden Key and Phi Beta Kappa Honors Societies
- Research, writing and publishing experience

PUBLIC AND VOLUNTEER SERVICE:

President/Member, Canyons School District Board of Education, Sandy, Utah (2008-2014)
Vice President, Jordan School District Board of Education, Sandy, Utah (2007-2009)
Chairperson, Sandy Elementary School Community Council
Chairperson, Sandy Elementary School Trust Land Committee
Director, Community Mediation Center, Provo, Utah (2000-2001)
Member, Board of Adjustment, Sandy City (2004-2008)
Member, CDBG Sandy Citizen Committee, Sandy City, Sandy, Utah (1997-2004)

AWARDS:

Excellence in Service, Unified Police District of Greater Salt Lake (2016)
Outstanding Service Award, Sandy City (2012)
Service Provider of the Year, City of Taylorsville (2011)
Outstanding Elected Official Award, Sandy City (2010)

Daniel Van Beuge

(801)809-7391 ■ 1562 W Misty Fen Wy, Utah 84088 ■ Danielrvb@gmail.com

EDUCATION

University of Utah S.J. Quinney College of Law, Salt Lake City, Utah
Juris Doctor May 2018 – Utah Bar member in good standing #17120

Weber State University, Ogden, Utah
Bachelor of Science, December 2012
Major: Criminal Justice Minor: Psychology
Cumulative GPA: 3.62 Major GPA: 3.78

EXPERIENCE

Cowdell & Woolley, Midvale, Utah
Attorney, March 2022 – Current

- Criminal prosecution for Justice and District Courts
- Represent clients in civil litigation matters
- Advise small cities on legal issues and concerns

Attorney/Solo Practitioner, West Jordan, Utah
Family Law and Criminal Law, July 2019 – March 2022

- Effectively communicate with clients and opposing counsel
- Represent clients in court hearings and at trial
- Negotiate settlements for clients

South Salt Lake Police, South Salt Lake City, Utah
Police Officer, April 2018 – June 2020

- Respond to calls for service
- Patrol city and make citizen contact
- Document contacts and arrests made through detailed reports

Utah Army National Guard, Draper, Utah
Captain, January 2011- Current

- Advising Brigade command staff relating to legal matters
- Handle investigations related to misconduct
- Handle investigations of injuries while on duty

Valley Emergency Communication Center, West Valley City, Utah
Communication Officer, October 2008 –April 2018

- Answer incoming emergency and non-emergency calls
- Provide further instructions to callers
- Relay information to responders in concise manner

INTERESTS AND SKILLS

- Playing sports
- Awarded superior fitness in police academy
- Salt water aquariums

Sharik Peck

27 N 500 W
Brigham City, UT 84302

435-760-3626
sharikpeckii@gmail.com

Education

The Pennsylvania State University, Penn State Law, University Park, PA
J.D. May 2020
GPA: **3.51** Rank: **Top 16**%
Presidential Scholar, SPS Treasurer, Woolsack Society, LGAMES President

Utah State University, Logan, UT
M.S. Financial Economics 2014
GPA: **3.70**
B.A. Economics, ***summa cum laude,*** 2013
GPA: **4.00**

Experience

Attorney, Prosecutor for Cowdell Law (March 2022-present)

Utah Second District Court (May 2020- March 2022)
Law Clerk to Judges Bean and Ortega as well as Lead law clerk for all Ogden Judge assignments

Utah County Attorney's Office Felony Prosecution Team
3rd year practice in court appearances, bench trials, and legal research and writing

Utah County Public Defender's Office
3rd year practice in court appearances, plea negotiation, and legal research and writing

Utah First District Court
Summer Internship 2018
- Wrote bench memorandums, decisions, and other assignments under for 6 county justices

Conservice LLC, Logan, UT
Billing Manager and Trainer, 2015-2018
- Managed the billing for thousands of apartments' utilities monthly
- Created training materials and trained half of the billing department in person
- Quality Controlled details and regulation on billing for the entire department as needed

Zions Bancorp, Cache Valley, UT
Peak Operations Teller, 2014-2015
- Handled many daily bank transactions quickly and accurately while applying Federal Regulation of banking
- Became certified in 4 years-worth of training in regulation in my first 8 months.

Candle of Light -Vela de Luz- 501(c)3, Logan, UT
Chief Financial Officer, Incorporator, and Director 2015-2017

Zions Bank Utah State University Bond Practicum, Logan, UT
Risk Analyst for a $5,000,000 bond fund

HURRICANE CITY
UTAH

STAFF COMMENTS

Discussion about our City **Vision, Mission Statement, and Motto.**

Discussion:
VISION:
Small town charm allowing families to thrive, with desirable open space we protect and cherish.

MISSION:
Hurricane City is committed to maintaining its unique small town charm, recognizing new growth and development will occur, and emphasizes the need to guide such development to help families thrive in business, recreation and the home.

MOTO:
Built by pioneers, who In God they Trusted.
- Mayor Billings

Findings:

Recommendation:

Attachments:
1. Core Values

Responsibility	Friendship	Potential	Sustainability
Traditional	Quality	Family	Transparency
Potential	Kindness	Fairness	Prosperity
Focus	Recreation	Respect	Fairness
Foresight	Generosity	Service	Cleanliness
Harmony	Careful	Happiness	Communication
Spirituality	Stability	Community	Courtesy
Love	Thankful	Wisdom	Vision
Fun			